MOTOROLA SOLUTIONS

APX™ TWO-WAY RADIOS

APX 2000 Model 3 User Guide

SEPTEMBER 2025

© 2025 Motorola Solutions, Inc. All Rights Reserved.

68012005014-JF

Intellectual Property and Regulatory Notices

Copyrights

The Motorola Solutions products described in this document may include copyrighted Motorola Solutions computer programs. Laws in the United States and other countries preserve for Motorola Solutions certain exclusive rights for copyrighted computer programs. Accordingly, any copyrighted Motorola Solutions computer programs contained in the Motorola Solutions products described in this document may not be copied or reproduced in any manner without the express written permission of Motorola Solutions.

No part of this document may be reproduced, transmitted, stored in a retrieval system, or translated into any language or computer language, in any form or by any means, without the prior written permission of Motorola Solutions, Inc.

Trademarks

MOTOROLA, MOTO, MOTOROLA SOLUTIONS, and the Stylized M Logo are trademarks or registered trademarks of Motorola Trademark Holdings, LLC and are used under license. All other trademarks are the property of their respective owners.

License Rights

The purchase of Motorola Solutions products shall not be deemed to grant either directly or by implication, estoppel or otherwise, any license under the copyrights, patents or patent applications of Motorola Solutions, except for the normal nonexclusive, royalty-free license to use that arises by operation of law in the sale of a product.

Open Source Content

This product may contain Open Source software used under license. Refer to the product installation media for full Open Source Legal Notices and Attribution content.

European Union (EU) and United Kingdom (UK) Waste of Electrical and Electronic Equipment (WEEE) Directive

The European Union's WEEE directive and the UK's WEEE regulation require that products sold into EU countries and the UK must have the crossed-out wheelie bin label on the product (or the package in some cases). As defined by the WEEE directive, this crossed-out wheelie bin label means that customers and end users in EU and UK countries should not dispose of electronic and electrical equipment or accessories in household waste.

Customers or end users in EU and UK countries should contact their local equipment supplier representative or service center for information about the waste collection system in their country.

Disclaimer

Please note that certain features, facilities, and capabilities described in this document may not be applicable to or licensed for use on a specific system, or may be dependent upon the characteristics of a specific mobile subscriber unit or configuration of certain parameters. Please refer to your Motorola Solutions contact for further information.

© 2025 Motorola Solutions, Inc. All Rights Reserved

Regulatory Compliance Information

India

This product (H52UCH9PW7AN) conforms to the relevant Essential Requirements of TEC, Department of Telecommunications, Ministry of Communications, Govt of India, New Delhi-110001.

Contents

Intellectual Property and Regulatory Notices....2
Regulatory Compliance Information....3
List of Tables....13
Software Version....14
Chapter 1: Read Me First....15
1.1 Notations Used in This Manual....15
1.2 Radio Care....15
1.2.1 Cleaning Your Radio....17
1.2.2 Cleaning the External Surface of the Radio....17
1.2.3 Radio Service and Repair....17
1.3 Battery Recycling and Disposal....18
1.4 What Your Dealer or System Administrator Can Tell You....18
Chapter 2: Getting Started....19
2.1 Charging the Battery....19
2.2 Attaching the Battery....19
2.3 Attaching the Antenna....20
2.4 Removing and Attaching the Accessory Connector Cover....20
2.5 Best Practice for Attaching an Accessory to the Radio....20
2.6 Attaching the Belt Clip....20
2.7 Turning On the Radio....21
2.8 Adjusting the Volume....21
Chapter 3: Radio Controls....22
3.1 Radio Parts and Controls....22
3.2 Text Entry Icons....25
3.3 Programmable Features....27
3.3.1 Assignable Radio Functions....27
3.3.2 Assignable Settings or Utility Functions....30
Chapter 4: Status Indicators....31
4.1 Battery Charge Status....31
4.1.1 Fuel Gauge Icons....31
4.1.2 Accessing the Battery Info Screen....32
4.1.3 HAZLOC Battery Type Detection....32
4.2 LED Indications....32
4.3 Status Icons....33
4.4 TMS Status Icons....35
4.5 Call Type Icons....36

4.6 Top Lightbar Indicator.... 36
4.7 Intelligent Lighting Indicators 37
4.8 Alert Tones.... 38
4.9 Phone Call Displays and Alerts.... 40
4.10 Display Color Change On Channel.... 40
Chapter 5: General Radio Operation.... 42
5.1 Selecting a Zone.... 42
5.2 Selecting a Radio Channel.... 42
5.3 Selecting a Channel by using Channel Search Button.... 43
5.4 Mode Select Feature.... 43
5.4.1 Saving a Zone and a Channel to a Softkey.... 44
5.4.2 Saving a Zone and a Channel to a Button.... 44
5.4.3 Accessing Multi-Codeplug.... 45
5.5 Receiving and Responding to a Radio Call.... 45
5.5.1 Receiving and Responding to a Talkgroup Call.... 45
5.5.2 Receiving and Responding to a Private Call (Trunking Only).... 46
5.5.3 Receiving and Responding to a Telephone Call (Trunking Only).... 46
5.6 Methods to Make a Radio Call.... 47
5.6.1 Making a Talkgroup Call.... 47
5.6.2 Making a Private Call (Trunking Only).... 47
5.6.3 Making an Enhanced Private Call (Trunking Only).... 48
5.6.4 Making a Telephone Call (Trunking Only).... 49
5.7 Switching Between Repeater or Direct Operation Button.... 49
5.8 Monitor Feature.... 49
5.8.1 Monitoring a Channel.... 50
5.8.2 Monitoring Conventional Mode.... 50
Chapter 6: Additional Performance Enhancement.... 51
6.1 ASTRO 25 Enhanced Data.... 51
6.2 Dynamic System Resilience.... 51
6.3 CrossTalk Prevention.... 51
6.4 Encrypted Integrated Data.... 51
6.5 SecureNet.... 51
6.6 Over-the-Air Rekeying.... 51
6.7 P25 Digital Vehicular Repeater System.... 52
6.8 Conventional Talkgroup and Radio Scan Enhancements.... 52
Chapter 7: Advanced Features.... 53
7.1 Advanced Call Features.... 53
7.1.1 Selective Call (ASTRO Conventional Only).... 53
7.1.1.1 Receiving a Selective Call.... 53
7.1.1.2 Making a Selective Call.... 53

7.1.2 Talkgroup Call Feature (Conventional Only) 54
7.1.2.1 Selecting a Talkgroup 54
7.1.3 Sending a Status Call 54
7.1.4 Making Priority Dispatch Calls 55
7.1.5 Dynamic Regrouping (Trunking Only) 55
7.1.5.1 Classification of Regrouped Radios 56
7.1.5.2 Requesting a Reprogram (Trunking Only) 56
7.1.6 Dynamic Zone Programming 56
7.1.6.1 Entering the Dynamic Zone to Select a Dynamic Channel 57
7.1.6.2 Saving a Channel in the Dynamic Zone from List Selection 57
7.1.6.3 Saving a Channel in the Dynamic Zone from Channel Name 57
7.1.6.4 Deleting a Channel in the Dynamic Zone 58
7.1.7 Zone-to-Zone Cloning 58
7.1.7.1 Cloning Zones 59
7.1.8 Multiple Private Line 59
7.1.8.1 Selecting Multiple Private Line 60
7.2 Remote Monitor 60
7.3 Contacts 60
7.3.1 Making a Private Call from Contacts 61
7.3.2 Adding a New Contact Entry 61
7.3.3 Deleting a Contact Entry 62
7.3.4 Adding a Contact to a Call List 63
7.3.5 Removing a Contact from a Call List 63
7.3.6 Methods of Contact Editing in a Call List 63
7.3.6.1 Editing an Entry Alias 63
7.3.6.2 Editing as Entry ID 64
7.3.6.3 Editing a Call Type 64
7.3.7 Viewing Details of a Contact 65
7.4 Scan Lists 65
7.4.1 Intelligent Priority Scan 65
7.4.2 Viewing a Scan List 65
7.4.3 Editing the Scan List 66
7.4.4 Changing the Scan List Status 66
7.4.5 Viewing and Changing the Priority Status 67
7.5 Scan 67
7.5.1 Turning Scan On or Off 67
7.5.2 Making a Dynamic Priority Change (Conventional Scan Only) 68
7.5.3 Deleting a Nuisance Channel 68
7.5.4 Restoring a Nuisance Channel 68
7.6 Call Alert Paging 69

7.6.1 Receiving a Call Alert Page.... 69
7.6.2 Sending a Call Alert Page.... 69
7.7 Recent Calls.... 70
7.7.1 Viewing Recent Calls.... 70
7.7.2 Deleting Calls.... 71
7.7.3 Instant Recall.... 71
7.7.3.1 Saving and Playback Calls.... 72
7.8 In-Call User Alert.... 73
7.9 Quick Call II.... 73
7.9.1 Initiating Quick Call II Transmissions.... 73
7.10 Emergency Operation.... 74
7.10.1 Special Considerations for Emergency Operation.... 74
7.10.2 Emergency Keep-Alive.... 75
7.10.3 Exiting Emergency Operation.... 75
7.10.4 Exiting Emergency as Supervisor (Trunking Only).... 75
7.10.5 Remote Emergency.... 75
7.10.5.1 Sending Remote Emergency to Specific Users.... 76
7.10.5.2 Sending Remote Emergency by Entering the User ID.... 76
7.10.5.3 Manually Refreshing the Remote Emergency List.... 77
7.10.5.4 Receiving Remote Emergency.... 77
7.10.5.5 Filtering Remote Emergency Contacts.... 77
7.10.6 Sending an Emergency Alarm.... 77
7.10.7 Sending an Emergency Call (Trunking Only).... 78
7.10.8 Sending An Emergency Call With Hot Mic (Trunking Only).... 78
7.10.9 Sending an Emergency Alarm with Emergency Call.... 79
7.10.10 Sending An Emergency Alarm and Call with Hot Mic.... 79
7.10.11 Sending a Silent Emergency Alarm.... 80
7.11 Fireground.... 80
7.11.1 Entering Fireground Zone Channel (Conventional).... 81
7.11.2 Responding to Evacuation Indicator.... 81
7.12 Sending Evacuation Tone.... 82
7.13 Tactical Public Safety (Conventional Only).... 82
7.13.1 Using TPS Normal Transmission.... 82
7.13.2 Using TPS Emergency Transmission.... 82
7.14 Fall Alert.... 83
7.14.1 Radio Alerts When Fall Alert is Triggered.... 83
7.14.2 Testing Fall Alert.... 83
7.14.3 Exiting Fall Alert.... 84
7.14.4 Reinitiating Fall Alert.... 84
7.15 Automatic Registration Service.... 84

7.15.1 Selecting or Changing the ARS Mode....84
7.15.2 User Login Feature....85
7.15.2.1 Logging In as a User....85
7.15.2.2 Logging Out....86
7.16 Text Messaging Service....86
7.16.1 Accessing the Messaging Features....87
7.16.2 Composing and Sending a New Text Message....87
7.16.3 Sending a Quick Text Message....88
7.16.4 Priority Status and Request Reply for New Text Messages....89
7.16.4.1 Appending a Priority Status to a Text Message....89
7.16.4.2 Removing a Priority Status from a Text Message....89
7.16.4.3 Appending a Request Reply to a Text Message....89
7.16.4.4 Removing a Request Reply from a Text Message....90
7.16.4.5 Appending a Priority Status and a Reply Request to a Text Message....90
7.16.4.6 Removing a Priority Status and a Reply Request from a Text Message....90
7.16.4.7 Receiving a Text Message....91
7.16.4.8 Viewing a Text Message from the Inbox....91
7.16.4.9 Replying to a Received Text Message....92
7.16.4.10 Accessing the Drafts Folder....92
7.16.4.11 Sent Text Messages....93
7.16.4.11.1 Viewing a Sent Text Message....93
7.16.4.11.2 Sending a Sent Text Message....93
7.16.4.12 Deleting a Text Message....94
7.16.4.13 Deleting All Text Messages....94
7.17 ASTRO 25 Advanced Messaging Solution....94
7.17.1 Two-Factor Authentication....95
7.17.1.1 Logging in using the Two-Factor Authentication....95
7.17.1.2 Logging out of Two-Factor Authentication....96
7.17.2 Sending a Query....96
7.17.3 Receiving a Query....97
7.18 Secure Operations....98
7.18.1 Selecting Secure Transmissions....98
7.18.2 Selecting Clear Transmissions....98
7.18.3 Managing Encryption....98
7.18.3.1 Loading Encryption Keys....98
7.18.3.2 Multikey Feature....99
7.18.3.3 Selecting Encryption Keys....99
7.18.3.4 Selecting Keysets....100
7.18.3.5 Erasing Encryption Keys....100
7.18.3.6 Requesting an Over-the-Air Rekey....101

7.18.3.7 MDC OTAR (Conventional Only)....101
7.18.3.8 Infinite UKEK Retention....102
7.18.3.9 Hear Clear....102
7.19 Radio Lock....102
7.19.1 Enabling or Disabling Radio Lock (Secure Radios Only)....103
7.19.2 Changing the Radio Lock Password....103
7.19.3 Changing the Tactical Inhibit Password....104
7.20 Radio Stun and Kill....104
7.20.1 Radio Stun....104
7.20.1.1 Using Radio Stun....104
7.20.2 Radio Kill....105
7.20.2.1 Using Remote Kill to Kill Another Radio....105
7.20.2.2 Using Direct Kill to Kill Your Own Radio....106
7.21 Radio Inhibit....106
7.22 Location....106
7.22.1 Outdoor Location Feature....107
7.22.2 Location Format....107
7.22.3 MGRS Coordinates....108
7.22.4 Accessing the Outdoor Location Feature....108
7.22.5 Selecting Location Format....108
7.22.6 Saving a Waypoint....109
7.22.7 Viewing a Saved Waypoint....109
7.22.8 Editing the Alias of a Waypoint....110
7.22.9 Editing the Coordinates of a Waypoint....110
7.22.10 Deleting a Single Saved Waypoint....111
7.22.11 Deleting All Saved Waypoints....112
7.22.12 Measuring the Distance and Bearing from a Saved Waypoint....112
7.22.13 Location Feature in Emergency Mode....112
7.22.14 Peer-Location on the Display (ASTRO Conventional)....113
7.23 Mission Critical Geofence (ASTRO 25 Trunking)....113
7.23.1 Entering the Geofence Area....113
7.23.2 Mission Critical Geofence....114
7.23.3 Entering Mission Critical Geofence....114
7.23.4 Exiting Mission Critical Geofence....115
7.24 Trunking System Controls....115
7.24.1 Operating in Failsoft System....115
7.24.2 Imbalanced Coverage....116
7.24.3 Out-of-Range Radio....116
7.24.4 Site Trunking Feature....116
7.24.5 Site Search....116

7.24.6 Locking and Unlocking a Site....116
7.24.7 Viewing the Current Site....117
7.24.8 Changing the Current Site....117
7.25 Mission Critical Wireless Bluetooth® Wireless Technology....117
7.25.1 Pairing with Low Frequency-Motorola Proximity Pairing (LF-MPP) Feature....118
7.25.2 PIN Authentication in Pairing....118
7.25.2.1 Pairing the Authentication PIN when Receiving a Pairing Request....119
7.25.2.2 Pairing the Authentication PIN with the Generated Numeric PIN....119
7.25.2.3 Pairing the Authentication PIN by Manually Keying in the Same PIN....120
7.25.3 Viewing and Clearing the Bluetooth Device Information....120
7.25.4 Editing the Bluetooth Friendly Name....121
7.25.5 Responder Alert Sensors....121
7.25.5.1 Holster Sensor....122
7.25.5.2 Low Battery Notification....122
7.25.5.3 Disabling the Sensor....122
7.25.5.3.1 Disabling the Sensor Temporarily....122
7.25.5.3.2 Disabling the Sensor Permanently....122
7.26 ASTRO 25 (P25) Programming Over Project 25 (POP25)....123
7.26.1 Responding to the Notification of Upgrade....123
7.27 Voice Announcement....124
7.28 Site Selectable Alerts (ASTRO 25 Trunking)....124
7.28.1 Sending SSA Notification to Single Site....124
7.28.2 Sending SSA Notification to Single Site by Manual Entry....125
7.28.3 Sending SSA Notification to All Sites....125
7.28.4 Sending SSA Notification to All Available Sites....126
7.28.5 Stopping SSA Notification of a Single Site....127
7.28.6 Stopping SSA Notification of a Single Site by Manual Entry....127
7.28.7 Stopping SSA Notification of All Sites....128
7.28.8 Stopping SSA Notification of All Available Sites....128
7.29 Utilities....129
7.29.1 Selecting the Power Level....129
7.29.2 Selecting a Radio Profile....129
7.29.3 Enabling and Disabling the Radio Alias....130
7.29.4 Selecting the Audio Speaker....130
7.29.5 Controlling the Display Backlight....131
7.29.6 Locking and Unlocking the Keypad and Controls....131
7.29.7 Turning the Controls and Keypad Buttons Tones On or Off....132
7.29.8 Turning Voice Mute On or Off....132
7.29.9 Using the Time-Out Timer....132
7.29.10 Time and Date Setup....133

7.29.10.1 Editing the Time and Date.... 133
7.29.11 Adjusting the Squelch Level.... 134
7.29.12 Conventional Squelch Operation.... 134
7.29.12.1 Using Conventional Squelch Operation Features.... 135
7.29.13 Using the PL Defeat Feature.... 135
7.29.14 Digital PTT ID Support.... 135
7.29.15 Smart PTT (Conventional Only).... 135
7.29.16 Transmit Inhibit.... 136
7.29.16.1 Enabling Transmit Inhibition.... 136
7.29.16.2 Disabling Transmit Inhibition.... 137
7.29.17 General Radio Information.... 137
7.29.17.1 Accessing the Radio Information.... 137
7.29.17.2 Viewing the IP Information.... 138
7.29.17.3 Viewing the Control Assignments.... 139
7.29.17.4 Editing the Soft ID.... 139
7.29.18 Front Panel Programming.... 140
7.29.18.1 Initiating the FPP Feature.... 140
7.29.18.2 Changing Password (Optional).... 140
7.29.18.3 Selecting a Channel within a Zone.... 141
7.29.18.4 Changing a Channel Parameter.... 141
7.29.18.5 Editing Parameters.... 142
Chapter 8: Accessories.... 144
Legal and Compliance Statements.... 145
Disclaimer.... 145
Supplier's Declaration of Conformity.... 145
Important Safety Information.... 146
Notice to Users (FCC and ISED).... 146
FCC Licensing Information.... 147
Applying for Canadian License.... 147
ISED WLAN Statement.... 148
Maritime Radio Use in the VHF Frequency Range.... 149
Special Channel Assignments.... 149
Emergency Channel.... 149
Non-Commercial Call Channel.... 149
Operating Frequency Requirements.... 149
Declaration of Compliance for the Use of Distress and Safety Frequencies.... 152
Technical Parameters for Interfacing External Data Sources.... 152
Limited Warranty.... 153
MOTOROLA SOLUTIONS COMMUNICATION PRODUCTS.... 153

I. WHAT THIS WARRANTY COVERS AND FOR HOW LONG:..... 153
II. GENERAL PROVISIONS:.....154
III. STATE LAW RIGHTS:.....154
IV. HOW TO GET WARRANTY SERVICE:..... 154
V. WHAT THIS WARRANTY DOES NOT COVER:.....154
VI. PATENT AND SOFTWARE PROVISIONS:.....155
VII. GOVERNING LAW:..... 156
VIII. For Australia Only..... 156

List of Tables

Table 1: Text Entry Modes.....26
Table 2: Keypad Characters.....26
Table 3: LED Indications.....33
Table 4: TMS Status Icons.....35
Table 5: Call Type Icons.....36
Table 6: MPL Selection Mode.....60
Table 7: Emergency Operation Scenarios.....74
Table 8: Parameter Editing Keys.....142
Table 9: VHF Marine Channel List.....150

Software Version

All the features described in the following sections are supported by the software version **R37.00.00** or later.

See Accessing the Radio Information on page 137 to determine the software version of your radio.

Contact your system administrator for more details of all the supported features.

Chapter 1

Read Me First

This User Guide covers the basic operation of the radio. However, your dealer or system administrator may have customized your radio for your specific needs. Check with your dealer or system administrator for more information.

1.1 Notations Used in This Manual

Notations such as **Warning**, **Caution**, and **Notice** are used throughout the text in this publication. These notations are used to emphasize that safety hazards exist, and the care that must be taken or observed.

WARNING: An operational procedure, practice, or condition and so on, which may result in injury or death if not carefully observed.

CAUTION: An operational procedure, practice, or condition and so on, which may result in damage to the equipment if not carefully observed.

NOTE: An operational procedure, practice, or condition and so on, which is essential to emphasize.

The following special notations identify certain items.

Example	Description
Home button or	Buttons and keys are shown in bold print or as an icon.
PhonPhone	Menu entries are shown similar to the way they appear on the display of the radio.
>	This means “Press the right side of the 4-Way Navigation Button”.
	This means the content with this icon is designated for radio with **Multi-Function Knob (MFK)**.
	This means the content with this icon is designated for radio with **Volume Control Knob** and **16–Position Select Knob**.

1.2 Radio Care

Proper radio usage and care ensure efficient operation and long-life of the product.

CAUTION: Use the radio according to the following recommendations and warnings.

- Your radio casing has a vent port for pressure equalization in the radio. Never poke this vent Ⓐ with objects such as needles, tweezers, or screwdrivers. Poking the vent could create leak paths into the radio and the radio submersibility will be lost.

  See the following picture for radio with Multi-function Knob.

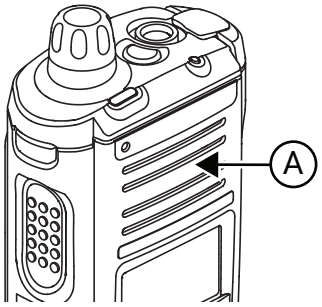

See the following picture for radio with two knobs.

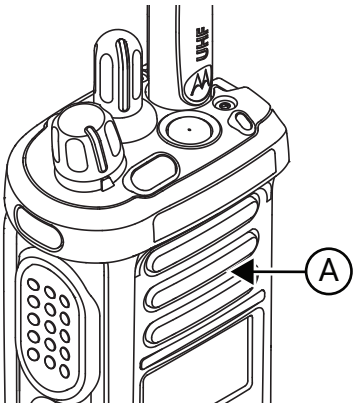

- Never obstruct or cover the vent port, even with a label.
- Ensure that no oily substances come in contact with the vent port.
- Your radio is designed to be submerged to a maximum depth of six feet and maximum time of two hours. Exceeding either maximum limit can result in damage to the radio.
- The radio with antenna attached properly is submersible to a maximum depth of 1 meter (3.28 feet) and a maximum submersion time of 30 minutes. Exceeding either maximum limit or use without antenna may result in damage to the radio.
- If the radio battery contacts are exposed to water without the battery attached, dry and clean the radio battery contacts before attaching a battery to the radio. Turn the radio over with the battery contact facing down and shake the radio so any trapped water can escape. A short circuit of the contacts could occur if they are not dried properly.
- If the radio has been submerged in water, shake the radio to remove any water that is trapped inside the speaker grille and microphone port. Otherwise, the water decreases the audio quality of the radio.
- If an accessory is not attached to the radio, ensure that the accessory connector cover is attached to the radio side accessory connector.
- If the radio is submerged or exposed to a high force water spray, such as from a hose, remove the accessory or accessory connector cover immediately and ensure that no water is forced into the accessory connector or radio interface. Rinse and dry the area and reattach the accessory or accessory connector cover if leakage occurs.
- If the radio is exposed to a corrosive environment, such as salt water or corrosive gases or liquids, rinse, and clean the radio immediately to prevent damage to radio materials, especially plated surfaces. Remove the battery and the antenna before cleaning.
- Do **not** disassemble the radio as you could damage radio seals and result in leak paths into the radio. Any radio maintenance should be performed only by a qualified radio technician.

- Only Underwriter Laboratory (UL) approved service centers can open and service UL certified radios. Opening or repairing at unauthorized locations invalidates hazardous location rating of the radio.
- Do **not** pound, drop, or throw the radio unnecessarily.
- Turn off the radio when charging the radio using a wall-mounted charger. Otherwise, the Fall Alert and Emergency may be accidentally triggered.
- When cleaning the radio, do not use a high-pressure jet spray as this can exceed the depth pressure and cause water to leak into the radio.

1.2.1
Cleaning Your Radio

To clean the external surfaces of your radio, perform the following:

Procedure:

1. Combine one teaspoon of mild dishwashing detergent to one gallon of water (0.5% solution).
2. Apply the solution sparingly with a stiff, non-metallic, shortbristled brush, making sure that excess detergent does not get entrapped near the connectors, controls, or crevices.
3. Rinse and then dry the radio thoroughly with a soft, lint-free cloth.
4. Clean battery contacts with a lint-free cloth to remove dirt or grease.

1.2.2
Cleaning the External Surface of the Radio

Prerequisites:

⚠ **CAUTION:** Do **not** use solvents to clean your radio. Spirits may permanently damage the radio housing. Do **not** submerge the radio in detergent solution.

Procedure:

1. Combine 1 teaspoon of mild dishwashing detergent to 1 gallon of water (0.5% solution).
2. Apply the solution sparingly with a stiff, non-metallic, short-bristled brush, ensuring that excess detergent does not get entrapped near the connectors, controls, or crevices.
3. Dry the radio thoroughly with a soft, absorbent, lint-free cloth.
4. Ensure that no water remains entrapped near the connectors, cracks, or crevices.

1.2.3
Radio Service and Repair

Proper repair and maintenance procedures ensure efficient operation and long-life of this radio. A Motorola Solutions maintenance agreement provides expert service to keep the radio and all other communication equipment in perfect operating condition.

A nationwide service organization is provided by Motorola Solutions to support maintenance services. Through its maintenance and installation program, Motorola Solutions makes the finest service available to those desiring reliable continuous communications on a contract basis.

For a contract service agreement, contact your nearest Motorola Solutions service or sales representative, or an authorized Motorola Solutions dealer.

1.3
Battery Recycling and Disposal

In the U.S. and Canada, Motorola Solutions participates in the nationwide Call2Recycle program for battery collection and recycling. Many retailers and dealers participate in this program.

For the location of the drop-off facility closest to you, go to http://www.call2recycle.org/ or call 1-800-8-BATTERY. This website and telephone number also provide other useful information concerning recycling options for consumers, businesses, and governmental agencies.

1.4
What Your Dealer or System Administrator Can Tell You

If the radio is to be operated in extreme temperatures (less than -30 °C or more than +60 °C), check with your system administrator for the correct radio settings.

You can consult your dealer or system administrator about the following:

- Is your radio programmed with any preset conventional channels?
- Which buttons have been programmed to access other features?
- What optional accessories may suit your needs?

NOTE: Specifications may vary for different radio models. For more information, contact your system administrator.

Chapter 2

Getting Started

This section provides instructions to prepare your radio for use.

2.1 Charging the Battery

Prerequisites:

WARNING: To avoid a possible explosion:

- Do **not** replace the battery in any area labeled **hazardous atmosphere**.
- Do **not** discard batteries in a fire.

When and where to use: Motorola Solutions-approved battery shipped with your radio is uncharged. Prior to using a new battery, charge it for a minimum of 16 hours to ensure optimum capacity and performance. For a list of Motorola Solutions-authorized batteries and chargers available for use with your radio, see Accessories on page 144.

NOTE: When charging a battery attached to a radio, the radio must be turned off.

Procedure:

To charge the battery, place the battery (with or without the radio) in a Motorola Solutions-approved charger.

The LED on the charger indicates the charging progress. For more information, see the *Charger User Guide*.

2.2 Attaching the Battery

If your radio is preprogrammed with volatile-key retention, the encryption keys are retained for approximately 30 seconds after battery removal. Check with your dealer or system administrator for more information. You can view the status of the battery if the radio is using an IMPRES battery.

NOTE:
User is notified if radio detects non-Motorola Solutions battery upon powering up, charging, or removing from the charger. This feature is applicable for IMPRES and Non-IMPRES battery.

When the radio is attached with the non-Motorola Solutions battery, a tone sounds, display shows `Unknown Battry` temporarily and battery indicator is not shown in the radio display. Battery menu screen displays `Unknown Battry` permanently and IMPRES battery information is not shown on the radio display.

Procedure:

1. Slide the battery into the radio frame until the latch at the bottom of the radio clicks into place.
2. To remove the battery, turn the radio off. Lift the latch at the bottom of the radio, then slide the battery out from the radio.

2.3

Attaching the Antenna

Prerequisites: Ensure the radio is turned off before attaching the antenna.

Procedure:

1. Set the antenna in the receptacle.
2. Turn the antenna clockwise to attach to the radio.
3. To remove the antenna, turn the antenna counterclockwise.

   NOTE: When removing the antenna, ensure that the radio is turned off.

2.4

Removing and Attaching the Accessory Connector Cover

The accessory connector is on the antenna side of the radio. It is used to connect accessories to the radio.

NOTE: To prevent damage to the connector, shield it with the connector cover when not in use.

Procedure:

1. To remove the accessory connector cover, rotate the thumbscrew counterclockwise until it disengages from the radio.

   NOTE: If the thumbscrew is too tight, use an allen wrench to loosen it.
2. Rotate and lift the connector cover to disengage it from the radio.
3. To attach the accessory connector cover, insert the hooked end of the cover into the slot above the connector.
4. Press the top of the cover downward to seat it in the slot.
5. Tighten by rotating the thumbscrew clockwise by hand.

2.5

Best Practice for Attaching an Accessory to the Radio

NOTE: To ensure proper operation, turn off the radio before connecting an accessory to the radio.

Procedure:

1. Attach an accessory connector to the side connector of the radio.
2. Secure the connection screw in a clockwise direction until tightened.

2.6

Attaching the Belt Clip

Procedure:

1. Align the grooves of the belt clip with those of the radio and push down until you hear a click.

2. To remove the clip, use a flat-bladed object to press the belt clip tab away from the radio.
3. Slide the clip upward and away from the radio.

2.7 Turning On the Radio

Procedure:

1. Press the **Multi-Function Knob** until the radio display lights on, then release the knob.
   - If the power-up test is successful, the display shows `SELFTEST` momentarily, followed by the Home screen and the Codeplug Alias.
   - If the power-up test is unsuccessful, you see `Error XX/YY` (`XX/YY` is an alphanumeric code).

     NOTE:
     If the radio fails to power-up after repeating a few times, record the `Error XX/YY` code and contact your dealer.

     Codeplug Alias feature is enabled through Customer Programming Software (CPS) configuration to display the codeplug alias as a temporary text during power on.

2.

2.8 Adjusting the Volume

When and where to use:

Ensure the radio is powered on.

Your radio is preprogrammed to reset to medium volume rate, which is Level 12, by default every time the radio powers up.

Procedure:

1.
2. To decrease the volume, rotate the knob counterclockwise.

Chapter 3

Radio Controls

This chapter explains the buttons and functions to control the radio.

3.1
Radio Parts and Controls

APX 2000 with Multi-Function Knob (MFK).

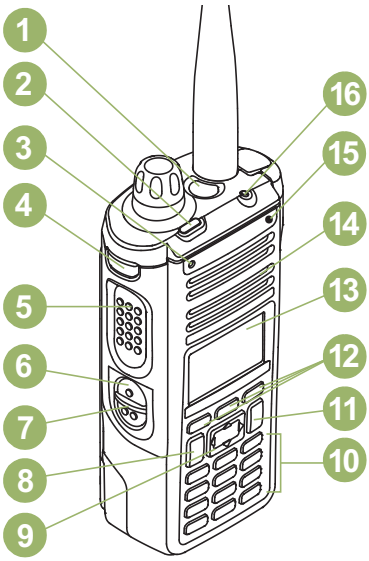

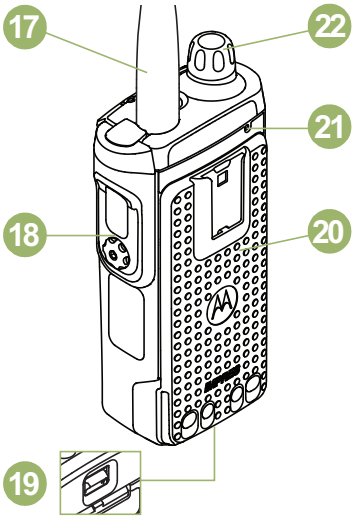

1*	**Top (Orange) Button** This button is usually programmed as the **Emergency** button.

* These radio controls/buttons are programmable.

2	Top Lightbar
3	Microphone
4*	**Top Side (Select) Button** Use this programmable button to access a programmed function or enable or disable a feature.
5	**Push-to-Talk (PTT) Button** Press and hold to talk in simplex calls or to initiate a group call, release it to listen.
6*	**Side Button 1** Use this programmable button to access a programmed function or enable or disable a feature.
7*	**Side Button 2** Use this programmable button to access a programmed function or enable or disable a feature.
8	**Home Button** Press to return to the Home screen.
9	**4-Way Navigation Buttons** Use these buttons for list scrolling and navigating around the menu hierarchy.
10	**Keypad** Use the keypad to enter alphanumeric characters for dialing, contact entries, and text messages.
11	**Data Feature Button** Press to enter the Text Messaging Service feature screen. Press and hold to enter the Inbox menu.
12	**Menu Select Buttons** Press to enter the menu corresponding to the button.
13	Main Display
14	Speaker
15	Bluetooth Pairing Indicator Location
16	LED Indicator
17	Antenna
18	Accessory Connector
19	Battery Latch (at the bottom)
20	Battery
21	Microphone
22*	**Multi-Function Knob (MFK)** Rotate clockwise until you hear a click to turn on the radio. Rotate counterclockwise until you hear a click to turn off the radio. This button is also preprogrammed to support a primary and secondary feature function or as a single function Volume knob. When programmed with the primary and secondary feature function, press the button to toggle between the following features:

	• Rotate clockwise to increase the volume and counterclockwise to decrease the volume. • Rotate to scroll through the channel or zone list.

APX 2000 with two knobs.

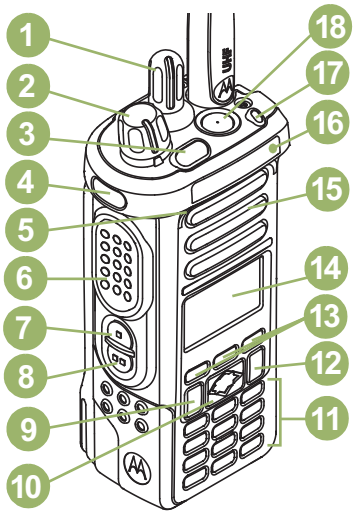

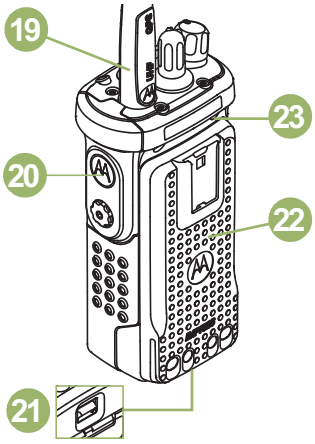

1*	**16-Position Select Knob** This knob is usually programmed for channel selection.
2	**On/Off/Volume Control Knob** Rotate clockwise until you hear a click to turn on the radio. Rotate counterclockwise until you hear a click to turn off the radio. Rotate clockwise to increase the volume. Rotate counterclockwise to decrease the volume.
3	Top Lightbar

* These radio controls/buttons are programmable.

4*	**Top Side (Select) Button** Use this programmable button to access a programmed function or enable or disable a feature.
5	Microphone
6	**Push-to-Talk (PTT) Button** Press and hold to talk in simplex calls or to initiate a group call, release it to listen.
7*	**Side Button 1** Use this programmable button to access a programmed function or enable or disable a feature.
8*	**Side Button 2** Use this programmable button to access a programmed function or enable or disable a feature.
9	**Home Button** Press to return to the Home screen.
10	**4-Way Navigation Buttons** Use these buttons for list scrolling and navigating around the menu hierarchy.
11	**Keypad** Use the keypad to enter alphanumeric characters for dialing, contact entries, and text messages.
12	**Data Feature Button** Press to enter the Text Messaging Service feature screen. Press and hold to enter the Inbox menu.
13	**Menu Select Buttons** Press to enter the menu corresponding to the button.
14	Main Display
15	Speaker
16	Bluetooth Pairing Location Indicator
17	LED Indicator
18*	**Top (Orange) Button** This button is usually programmed as the **Emergency** button.
19	Antenna
20	Accessory Connector
21	Battery Latch
22	Battery
23	Microphone

3.2

Text Entry Icons

This feature only supports Model 3.

Your radio uses icons to indicate the selected text entry mode.

Table 1: Text Entry Modes

Icon	Description
HEX	The text entry is in hexadecimal mode.
123	The text entry is in numeric mode.
Ab↑	The first character of the text entry is capitalized.
Abc	The text entry is in normal text mode.
ABC	The text entry is in uppercase mode.
abc	The text entry is in lowercase mode.
xt9	The text entry is in lowercase with predicted words shown at the bottom of the screen.
Xt9	The text entry is in mixed case and with predicted words shown at the bottom of the screen.
XT9	The text entry is in uppercase with predicted words shown at the bottom of the screen.

Depending on the selected mode, each key press generates a different character of the alphabet.

Table 2: Keypad Characters

Key	Mode	Output
1 key	Numeric/Uppercase/Lowercase	1 . , ? ! ; @ _ - * # & $ / + = \ “ ‘ ( )
	Hexadecimal Mode	1
2 key	Numeric	2
	Uppercase	A B C
	Lowercase	a b c
	Hexadecimal	2 A B C
3 key	Numeric	3
	Uppercase	D E F
	Lowercase	d e f
	Hexadecimal	3 D E F
4 key	Numeric	4
	Uppercase	G H I
	Lowercase	g h i
5 key	Numeric	5
	Uppercase	J K L
	Lowercase	j k l
6 key	Numeric	6
	Uppercase	M N O

Key	Mode	Output
	Lowercase	m n o
7 key	Numeric	7
	Uppercase	P Q R S
	Lowercase	p q r s
8 key	Numeric	8
	Uppercase	T U V
	Lowercase	t u v
9 key	Numeric	9
	Uppercase	W X Y Z
	Lowercase	w x y z
0 key	Numeric or Hexadecimal	0
	Uppercase or Lowercase	Toggles between mixed case mode, uppercase mode, and lowercase mode.
***** key	Numeric, Uppercase, or Lowercase	Space
# key	Numeric, Uppercase, or Lowercase	Toggles between numeric and letter mode.

3.3

Programmable Features

Your system administrator can program the programmable buttons as shortcuts to radio functions or preset channels/groups depending on the duration of a button press. Some functions can also be programmed to the radio switches.

3.3.1

Assignable Radio Functions

Bluetooth On/Off
Toggles Bluetooth between on and off.

Bluetooth Configuration
Allows you to access the **Bluetooth** menu.

Bluetooth Audio Reroute
Toggles the audio route between the radio speaker or the Remote Speaker Microphone and the Bluetooth headset.

Bluetooth Headset PTT
Keys up the Bluetooth Headset microphone.

Bluetooth Data Devices
Pairs your radio with other data devices for data transfer.

Bluetooth Clear All Pairing
Clears all Bluetooth pairing information on your radio.

Bluetooth Inquiry On/Off
Enables the Bluetooth Search feature.

Bluetooth Discoverable On/Off
Enables the visibility of your radio to other Bluetooth devices.

Call Alert
Allows your radio to function like a pager, or to verify if a radio is active on the system.

Call Response
Allows you to answer a private call.

Channel
Selects a channel.

Contacts
Allows you to access the **Contacts** menu.

Dynamic ID (Conventional Only)
Allows you to edit the ASTRO Individual ID and/or MDC Primary ID of the radio.

NOTE:

- If the Dynamic ID menu key is not pre-programmed in the radio, use dongle to display the menu key. Press the menu key and enter the password to view or edit the ASTRO Individual ID and/or MDC Primary ID of the radio.
- If the password is not pre-programmed, press the menu key to directly view or edit the ASTRO Individual ID and/or MDC Primary ID of the radio.

Dynamic Priority (Conventional Only)
Allows any channel in a Scan List (except for a Priority-One channel) to temporarily replace the Priority-Two channel.

Emergency
Depending on the programming, initiates or cancels an emergency alarm or call.

In-Call User Alert
Allows the radio to remain muted to affiliated talkgroup calls while operating on the current Trunking Personality or conventional channel.

Internet Protocol Address
Displays the Internet Protocol (IP) address, device name, and status of the radio.

Location
Displays the current location (latitude, longitude, time, and date), and also the distance and bearing to another location, or toggles GPS/Location between on and off.

Fall Alert Clear
Allows you to clear the Fall Alert mode alarm and exit Fall Alert feature.

Message
Allows you to access the message list.

Mode Select (MS01– MS13)
Long press – Saves the current zone and channel to one of the Mode Select menus when the **Preconfigurable Preset Zone and Channel** field is enabled.

Short press – Changes to the preset Mode Select zone and channel.

Monitor (Conventional Only)
Monitors a selected channel for all radio traffic until the function is disabled.

Multiple Private Line (Conventional Only)
Allows you to access the Multiple Private Line lists.

Nuisance Delete
Temporarily removes an unwanted channel, except for priority channels and the designated transmit channel from the scan list.

Phone Call
Allows you to make and receive calls similar to standard phone calls.

Private Call (Trunking Only)
Allows a call from one individual radio to another.

Private Line Defeat (Conventional Only)
Overrides any coded squelch (DPL or PL) that is preprogrammed to a channel.

Private Line Disable
Allows you to adjust the desired squelch level of the radio.

Priority Dispatch
Allows you to call the dispatcher on a different talkgroup.

Query
Launches a list of predefined short text messages only after logging in with Two-Factor Authentication.

Radio Profiles
Allows you to access a set of preprogrammed visual and audio settings of the radio.

Recent Calls
Allows you to view the recent call history of your radio.

Rekey Request
Notifies the dispatcher that a new encryption key is needed.

Remote Monitor
Enables the system administrator to remotely command a targeted radio.

Remote Emergency
Activates the Remote Emergency feature for an authorized user to initiate the Emergency feature on a target radio without target user intervention.

Repeater Access Button (RAB) (Conventional Only)
Allows you to manually send a repeater access codeword.

Reprogram Request (Trunking Only)
Notifies the dispatcher that a new dynamic regrouping assignment is needed.

Request-To-Talk (Conventional Only)
Notifies the dispatcher that you want to send a voice call.

Scan
Short press – Toggles the scan function between on and off.

Long press – Enables Scan List Programming and selects the scan list for editing.

Secure Transmission Select
Toggles secure transmission between on and off.

Selective Call (Conventional Only)
Calls an assigned radio.

Site Display/Search (Trunking Only)
Short press – Displays the current site ID and Received Signal Strength Indicator (RSSI) value.

Long press – Performs site search for Automatic Multiple Site Select (AMSS) or SmartZone operation (long press).

Site Lock/Unlock (Trunking Only)
Allows your radio to lock onto a specific site.

Status (Trunking Only)
Sends data calls to the dispatcher about a predefined status.

Talkaround/Direct (Conventional Only)
Toggles between using a repeater or communicating directly with another radio.

Talkgroup (Conventional Only)
Initiates a call to a preprogrammed group of radios.

Text Messaging Service (TMS)
Allows you to access the **Text Messaging Service (TMS)** menu.

TMS Quick Text
Selects a predefined message.

User
Allows you to log on to the server with a personally identifiable user name.

Zone Select
Selects a zone from the switch.

3.3.2
Assignable Settings or Utility Functions

Keypad/Controls Lock
Locks or unlocks the keypad, programmable buttons, switches, or rotary knobs.

Light/Flip
Press the button to toggle the display backlight on and off; press and hold the button to reverse the content of the top display.

Voice Announcement
Audibly indicates the current feature mode, zone, or channel that you have been assigned to.

Voice Mute
Toggles the voice transmission between mute and unmute.

Volume Set Tone
Sets the volume set tone.

Chapter 4

Status Indicators

This section explains the status indicators of the radio.

4.1 Battery Charge Status

Your radio indicates the battery charge status through LED, sounds, and the battery icon on the display. You can also check the battery charge status by using the menu entry.

Battery Protection is activated when the battery is low or operating in extremely low temperatures to extend radio communication. Features such as Wi-Fi and LTE are temporarily suspended.

When the Battery Protection Mode is active, you receive a notification. You can dismiss the Battery Protect Mode notification by tapping **Close** on the dialog box. The top display will switch between zones or channel information and Battery Protect Mode string.

Battery Protection Mode will end when the battery level or the temperature has returned to normal. A notification will appear on the front display indicating that LTE and Wi-Fi services have been restored. You can press **Close** to dismiss the notification or the dialog box will close itself after three minutes. The top display notification will also disappear.

If an IMPRES battery is not fully charged every 28 days, the fuel gauge is removed from the radio display.

4.1.1 Fuel Gauge Icons

The fuel gauge icon indicates the battery level of your radio.

Gauge	Battery Charge
	76% to 100% full[1]
	51% to 75%[1]
	26% to 50%[1]
	11% to 25%[1]
	10% or less (The gauge begins blinking at 10%)

[1] This is applicable for IMPRES battery operation only.

4.1.2
Accessing the Battery Info Screen

This feature displays the current capacity and charges cycles of your battery when an IMPRES battery is powering your radio. This feature must be enabled in your radio to see the information.

Procedure:

1. < or > to `Batt`.
2. Press the **Menu Select** button directly below `Batt`.

   Your radio displays the following result:

   Charge Percentage
   Percentage of current battery capacity.

   Remaining Capacity
   Remaining power of the battery in mAh.

   Estimated Charges
   Number of charges cycles the battery has gone through.

3. To return to the Home screen, press the **Menu Select** button directly below `Exit`.

4.1.3
HAZLOC Battery Type Detection

This feature alerts you when there is a HAZLOC certification mismatch between the radio and the battery. This feature supports IMPRES batteries only.

During power-up, the following scenarios occur if there is a mismatch:

- The radio continuously displays `Wrong Battery` with red intelligent backlight.
- The radio Voice Announcement announces the programmed Wrong Battery.
- The battery icon blinks continuously.
- A repetitive tone sounds.
- The red LED blinks continuously.

NOTE:
The radio does not display any indication when the radio is connected to the charger, the radio and battery match, or when the radio certification type is configured as **None** in Customer Programming Software (CPS).

This feature is enabled through CPS configuration. Check with your dealer or system administrator for more information.

4.2
LED Indications

The LED indications represent the operational status of your radio. A qualified technician can permanently disable the LED indication by programming it.

Table 3: LED Indications

Indication	Status
Solid red	Radio is transmitting.
Blinking red	Radio is transmitting at low battery condition.
Double blinking red	Radio is transmitting an emergency alarm or call.
Rapid blinking red	Radio has failed the self-test upon powering up or encountered a fatal error.
Solid yellow	Radio is receiving in both trunking and conventional clear mode. **NOTE:** The yellow LED illuminates only when the Busy LED feature is enabled through Customer Programming Software (CPS).
Blinking yellow	Radio is receiving a secured transmission.
Solid green	Radio is powering up or is on a non-priority channel while in the Scan List Programming mode.
Blinking green	Radio is receiving an individual or telephone call or is on a Priority-Two channel while in the Scan List Programming mode.
Rapid blinking green	Radio is on a Priority-One channel while in the Scan List Programming mode.

4.3

Status Icons

The LCD display of your radio shows radio status, text entries, and menu entries. The top two display rows contain color icons that indicate radio operating conditions.

The 160 x 90 pixel front liquid crystal display (LCD) of your radio shows radio status, text entries, and menu entries. The top two display rows contain color icons that indicate radio operating conditions.

Icon	Description
	The radio is receiving a call or data.
	The radio is transmitting a call or data.
	For IMPRES battery operation only – the icon shown indicates the charge remaining in the battery. For all battery operation – the icon blinks when the battery is low.
	The number of bars represents the received signal strength of the current site in trunking mode. The more stripes in the icon, the stronger the signal.
	The radio has roamed to and is registered to a foreign system.
	Direct **On** The radio is configured for direct radio-to-radio communication in conventional operation. **Off** The radio is connected with other radios through a repeater.

Icon	Description
	The selected channel is being monitored in conventional operation.
	The In-Call User Alert feature is enabled. Voice muting of the affiliated trunking talkgroup or selected conventional channel is activated.
H or L	The radio is set at High power. The radio is set at Low power.
M or M	The radio is set at Medium High power. The radio is set at Medium Low power.
	The radio is scanning a scan list.
	Blinking dot The radio detects activity on the designated Priority-One channel. **Steady dot** The radio detects activity on the designated Priority-Two channel.
	The vote scan feature is enabled.
	On Secure operation. **Off** Clear operation. **Blinking** Receiving an encrypted voice call.
AES	**On** The radio is operating in an Advanced Encryption Standard (AES) secure channel. **Off** The AES operation is cleared. **Blinking** The radio is receiving an AES-encrypted voice call.
	On The Global Position System (GPS) feature is enabled, and the signal is available. **Blinking** The GPS feature is enabled, but no signal is available.
IP IP	User Login Indicator (IP Packet Data) **On** The user is associated with the radio.

Icon	Description
	Blinking The device registration or user registration with the server failed due to an invalid username or pin. **Inverted** The user is logged on to the secured IP packet data.
	Data activity is present on the radio.
	The Bluetooth wireless technology is turned on and ready for connection.
	Steady Bluetooth is connected to the external Bluetooth device. **Blinking** Bluetooth device is disconnected.
	Turn the **Multi-Function Knob** to turn the volume up or down.

4.4

TMS Status Icons

This feature only supports Model 3 and Model 2.

Text Messaging Service (TMS) icons appear on the radio display when you send and receive text messages.

Table 4: TMS Status Icons

Icon	Description
	The inbox is full.
	The text message is sent.
	The text message cannot be sent.
	The selected text message in the inbox is not read.
	The selected text message in the inbox is read.
	The message has normal priority without a request for reply.
	The Request Reply feature is toggled on before the message is sent.
	The Priority feature is toggled on before the message is sent.
	The message is urgent and requires a reply.

Icon	Description
3/6	The index of the current message that you are viewing.

4.5
Call Type Icons

This feature only supports Model 3 and Model 2.

Call icons appear on the radio display when you make or receive a call, or view selected call lists. The call icons indicate the call types associated with an alias or ID.

Table 5: Call Type Icons

Icon	Description
	A radio number.
	A radio number added to a Call List.
	A mobile number.
	A mobile number added to a Call List.
	A landline phone number.
	A landline phone number added to a Call List.
	An incoming call or data.
	An outgoing call or data.
	An incoming emergency call.

4.6
Top Lightbar Indicator

The Top Lightbar Ⓐ indicates the secondary function of MFK and also the status of Intelligent Lighting.

See the following picture for **MFK** radio.

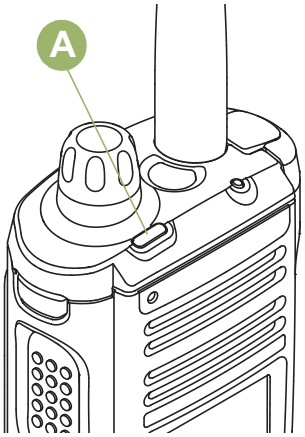

See the following picture for **two knobs** radio.

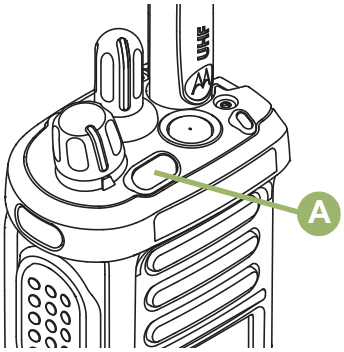

The lightbar blinks green when the MFK is using the secondary feature. See Multi-Function Knob (MFK) to understand the functionality of MFK.

The lightbar turn into solid color of orange, red, or green depending on the status of Intelligent Lighting. See Intelligent Lighting Indicators on page 37 for different status of Intelligent Lighting.

4.7

Intelligent Lighting Indicators

This feature temporarily changes the color of the **Top Lightbar** and adds a color bar to the main display screen to help signal that a radio event has occurred. This feature temporarily changes the display backlight color and the alert text background color of the radio to help signal that a radio event has occurred.

Backlight and Bar Color	Notification	When
Orange	Emergency Alerts	The radio initiates an emergency alarm or call.
		The radio receives an emergency alarm or call.
		The radio initiates the Fall Alert Post-Alert timer.
		The radio initiates Fireground Evacuation alarm.
Red	Critical Alerts	The radio battery is low.
		The radio is out of range.
		The radio enters Failsoft mode.

Backlight and Bar Color	Notification	When
		The radio is unable to establish a full connection with the system.
		The radio is unable to authenticate or register with the system.
Red	Critical Alerts	The radio is out of range.
		The radio enters Failsoft mode.
		The radio is unable to establish a full connection with the system.
		The radio is unable to authenticate or register with the system.
Green	Call Alerts	The radio receives a private call.
		The radio receives a phone call.
		The radio receives a call alert.
		The radio receives a selective call.
		The radio enters Geofence.

4.8

Alert Tones

Your radio uses alert tones to inform you of the condition of your radio. The following table lists these tones and when they occur.

You Hear	Tone Name	Heard
Short, Low-Pitched Tone	**Radio Self Test Fail**	When radio fails its power-up self test.
	Reject	When an unauthorized request is made.
	Time-Out Timer Warning	Four seconds before time out.
	No ACK Received	When radio fails to receive an acknowledgment.
	Individual Call Warning Tone	When radio is in an individual call for greater than six seconds without any activity.
	Fall Alert Entry	When radio initiates Fall Alert mode.
Long, Low-Pitched Tone	**Time-Out Timer Timed Out**	After time out.
	Talk Prohibit/PTT Inhibit	(When **PTT** button is pressed) transmissions are not allowed.
	Lack of Voice PTT Time out	When the radio ends your call after it detected there is lack of voice for 60 seconds after the PTT is pressed and hold. Your radio ends the call to enable your radio to receive calls from other radio users. The duration of this timer can be preprogrammed by a qualified radio technician.
	Out of Range	(When **PTT** button is pressed) the radio is out of range of the system.

You Hear	Tone Name	Heard
	Invalid Mode	When radio is on an unprepreprogrammed channel.
A Group of Low-Pitched Tones	Busy	When system is busy.
Short, Medium-Pitched Tone	Valid Key-Press	When a correct key is pressed.
	Radio Self Test Pass	When radio passes its power-up self test.
	Clear Voice	At beginning of a non-coded communication.
	Priority Channel Received	When activity on a priority channel is received.
	Emergency Alarm/Call Entry	When entering the emergency state.
	Central Echo	When central controller has received a request from a radio.
Long, Medium-Pitched Tone	Volume Set	When volume is changed on a quiet channel.
	Emergency Exit	When exiting the emergency state.
A Group of Medium-Pitched Tones	Failsoft	When the trunking system fails.
	Automatic Call Back	When voice channel is available from previous request.
	Keyfail	When encryption key has been lost.
	Console Acknowledge	When status, emergency alarm, or reprogram request ACK is received.
	Received Individual Call	When Call Alert or Private Call is received.
	Call Alert Sent	When Call Alert is received by the target radio.
	Site Trunking	When a SmartZone trunking system fails.
Short, High-Pitched Tone (Chirp)	Low-Battery Chirp	When battery is below preset threshold value.
Two High-Pitched Tones	GPS Fails	When the GPS fails or loses signal.
Ringing	Fast Ringing	When system is searching for target of Private Call.
	Enhanced Call Sent	When waiting for target of Private Call to answer the call.
	Phone Call Received	When a land-to-mobile phone call is received.
Gurgle	Dynamic Regrouping	(When **PTT** button is pressed) a dynamic ID has been received.
	Talk Permit	(When **PTT** button is pressed) is verifying with the system for accepting its transmissions.
Unique, Low-Pitched Chirp	New Message	When a new message is received.
Unique, High-Pitched Chirp	Priority Status	When a priority message is received.
Incremental-Pitched Tone	Bluetooth Paired	When Bluetooth accessory is paired with the radio.

You Hear	Tone Name	Heard
	Bluetooth Connected	When Bluetooth accessory is connected to the radio.
Decremental-Pitched Tone	**Bluetooth Unpaired**	When Bluetooth accessory is unpaired from the radio.
	Bluetooth Disconnected	When Bluetooth accessory is disconnected from the radio.
A Group of Very High-Pitched Tones	**Fall Alert Continuous Tone**	When radio is in Fall Alert mode and prepares to transmit Emergency Alarm when the timer of this alarm ends.
	Critical Fall Alert Continuous Tone	When radio is in Fall Alert Enhanced mode and prepares to transmit Emergency Alarm when the timer of this alarm ends.
Unique Low-High Tone	**Multi-Function Knob Enters Secondary Feature**	When Multi-Function Knob is toggled to secondary feature.
Unique High-Low Tone	**Multi-Function Knob Exits Secondary Feature**	When Multi-Function Knob is toggled to exit secondary feature and return to primary feature or when secondary function timer expires.

4.9

Phone Call Displays and Alerts

The following phone call displays and alerts appears on the radio display when you make and receive phone calls. The radio also uses alert tones to indicate the current status.

You Hear	You See	When	Notes
A Long Tone	`No phone`	**You press the PTT button and the phone system is not available.**	Press to hang up. The radio returns to the Home screen.
	`Phone busy`	**The phone system is busy.**	Press to exit the phone mode and try your call later.
A Busy Tone	`Phone busy`	**When a channel is not available.**	The radio automatically connects when a channel opens.
–	`No acknowledge`	**The call is not acknowledged.**	Press to hang up. The radio returns to the Home screen.
A High- Pitched Tone	**–**	**When you release the PTT button.**	The radio indicates to the landline party that the caller may begin talking.

NOTE: You have the option of sending additional digits (overdial), such as an extension number, credit card, or PIN numbers to the phone system. If the radio is preprogrammed for live overdial, every digit entered after the call is connected, is sent to the phone system.

If the radio is preprogrammed for buffered overdial, the digits pressed are entered into memory and then sent when the **PTT** button is pressed. Press the **PTT** button to send either digits or voice, but not both at the same time.

4.10

Display Color Change On Channel

This feature provides visual channel identification for users to have a quick visual recognition on a particular channel.

Your radio must be programmed to allow you to use this feature.

The backlight on top lightbar indicator turns off and if connected to DRSM, the DRSM backlight changes to white for the following scenarios:

- When changing to or powering up on invalid channels such as unprogrammed channels, receiver frequency error channel and blank channels.
- The radio is in radio stun or radio lock mode.

  NOTE: Radio stun or radio lock mode is only applicable to Model 3.5.

For hard key zeroize, key loading, and scan list programming, the backlight follows the home channel backlight color.

Chapter 5

General Radio Operation

This chapter explains the general operations of your radio.

5.1 Selecting a Zone

When and where to use: A zone is a group of channels. Do one of the following to select a radio channel. You can use these options interchangeably depending on your preference and the programmed functions.

Procedure:

- Select a zone using the radio menu `Zone`:
  a. < or > to `Zone` and press the **Menu Select** button directly below `Zone`.
  b. ︿ or ﹀ to the required zone, or use the keypad to enter the zone number.

     If the zone number entered is unprogrammed, the display shows `Invalid entry`. Repeat this step.

  c. Press the **Menu Select** button directly below `Sel` to confirm the displayed zone.
- Turn the preprogrammed **Zone Change MFK** to the required zone.

  If **Mode Change** is secondary feature of the **MFK**, press the **MFK** once to toggle to **Zone Change MFK** then only select the required zone.
- Select a zone using the radio menu `ZnUp` or `ZnDn`:
  a. < or > to `ZnUp` or `ZnDn`.
  b. Press and hold the **Menu Select** button directly below `ZnUp` or `ZnDn` until the required zone appears.

     Positions of `ZnUp` and `ZnDn` on the display may differ each time you release the **Menu Select** button. Read carefully before you press.

5.2 Selecting a Radio Channel

When and where to use: A channel is a group of radio characteristics, such as transmit/receive frequency pairs. Do one of the following to select a radio channel. You can use the options interchangeably depending on your preference and the programmed functions.

Procedure:

- Select a channel using the **MFK**:
  a. If channel is set as the primary mode, turn the **MFK** until the display shows the desired channel.

     If channel is not set as the primary mode, press the **MFK** once and repeat this step.
- Select a channel using the preprogrammed **16–Position Select Knob** to the desired channel.

a. Rotate the preprogrammed **16–Position Select Knob** to the desired channel.

- Select a channel using the radio menu `Chan`:

  a. < or > to `Chan`.

  b. Press the **Menu Select** button directly below `Chan`.

  c. ︿ or ﹀ to the required channel or use the keypad to enter the channel number.

  If the channel number entered is unprogrammed, the display shows `Invalid entry`. Repeat this step.

  d. Press the **Menu Select** button directly below `Sel` to confirm the selected channel.

- Select a channel using the radio menu `Channel Up` or `Channel Down`:

  a. ︿ or ﹀ to `ChUp` or `ChDn`.

  b. Press the **Menu Select** button directly below `ChUp` or `ChDn`.

  Positions of `ChUp` and `ChDn` on the display may differ each time you release the **Menu Select** button. Read carefully before you press.

5.3

Selecting a Channel by using Channel Search Button

This feature allows you to do a quick search for a specific channel in your radio by keying in the alias of the channel.

Procedure:

1. Perform one of the following actions:
   - Press the preprogrammed **Channel Search** button.
   - < or > to `CSrh` and press the **Menu Select** button directly below `CSrh`.

   A blinking cursor appears on the **Channel Search** screen.

2. Use the **keypad** to type or edit your channel name.
3. To initiate searching, press the **Menu Select** button directly below `CSrh` once the entry is done.

   To exit this procedure, press the **Menu Select** button directly below `Cncl`.

Result: One of the following scenarios occurs:

- The display shows `Searching`. Once found, the display shows the matched channel name and the radio changes its transmission to the selected channel.
- If the radio is triggered to search for an empty entry, the display shows `Invalid entry`. Repeat step 2 to search again.
- If the entry does not match, the display shows `Channel name not found`.Repeat step 2 to search again; or press ⌂ or the **Menu Select** button directly below `Exit` to exit.

5.4

Mode Select Feature

This feature only supports Model 3.5 and Model 2.5.

The Mode Select feature allows you to save the current zone and channel on your radio to one of the Mode Select feature menus (MS01–MS05) on a programmable side button (MS01–MS13).

When programmed, pressing the button changes the transmission to the saved zone and channel. When the **Preconfigurable Preset Zone and Channel** field is enabled, pressing and holding the preferred Mode Select menu saves the current zone and channel to one of the Mode Select menus. The radio displays `MS0x is programmed`.

NOTE: Your radio must be programmed for you to use this feature.

5.4.1
Saving a Zone and a Channel to a Softkey

Five softkeys are available for you to save the frequently used zone and channel.

Prerequisites: Enable the **Preconfigurable Preset Zone and Channel** field.

Procedure:

1. Toggle from your current zone and channel to the required zone and channel.
2. < or > to `MS1`, `MS2` ... or `MS5`.
3. Press and hold the **Menu Select** button directly below one of the softkeys (`MS1`–`MS5`).

Result:
You hear a short, medium-pitched tone when the zone and channel is saved.

If the **Preconfigurable Preset Zone and Channel** field is disabled, a negative tone sounds.

NOTE: Short press of the programmed softkey changes your current transmission to the zone and channel programmed in this softkey.

5.4.2
Saving a Zone and a Channel to a Button

You can save the frequently used zone and channel to the programmable buttons and keypad digit 0 to 9 buttons.

Prerequisites: Enable the **Preconfigurable Preset Zone and Channel** field.

Procedure:

1. Toggle from your current zone and channel to the required zone and channel.
2. Press and hold the button you desire to program.

Result:
You hear a short, medium-pitched tone when the zone and channel is saved.

If the **Preconfigurable Preset Zone and Channel** field is disabled, a negative tone sounds.

NOTE:
Short press of the programmed button changes your current transmission to the zone and channel programmed in this button.

5.4.3
Accessing Multi-Codeplug

Prerequisites: H-option must be set to enable Multi-Codeplug functionality.

NOTE:
Radios with older software versions require firmware update before this feature can be used.
Only the administrator have the ability to program Multi-Codeplug menu when the Option is present.
Multi-Codeplug Feature is not supported on Model 1.5 Portable Subscribers.

Procedure:

Switch and delete codeplug by performing the following actions:

Option	Actions
Switching a codeplug	**a.** Press **CPLG** menu item. **b.** Select the required agency, and press **Sel**. **c.** Press **Yes** to confirm. **NOTE:** The radio resets once the agency selection is confirmed. The menu displays the current agency after the radio resets.
Deleting a codeplug	**a.** Press **CPLG** menu item. **b.** Select the required agency, and press **Del**. **c.** Press **Yes** to confirm. **NOTE:** The menu displays the current agency after the deletion.

5.5
Receiving and Responding to a Radio Call

Once you have selected the required channel and/or zone, you can proceed to receive and respond to calls.

The radio shows different indicators based on the system the radio is configured.

- The LED lights up solid red while the radio is transmitting.
- In conventional mode, the LED lights up solid yellow when the radio is receiving a transmission.
- In trunking mode, there is no LED indication when the radio receives a transmission.
- If the radio is receiving a secure transmission, the LED blinks yellow.

5.5.1
Receiving and Responding to a Talkgroup Call

When and where to use: When you receive a talkgroup call (while on the Home screen) the radio displays the following depending on the system your radio is configured to:

- For ASTRO Conventional system, the LED lights up solid yellow. The display shows the talkgroup alias or ID, and the caller alias or ID.

- For Trunking system, the display shows the caller alias or ID.

Procedure:

1. Hold the radio vertically 1 to 2 inches (2.5 to 5.0 cm) from your mouth.
2. Wait for the Talk Permit Tone. Then, press the **PTT** button to respond to the call.

   The LED lights up solid red.
3. Release the **PTT** button to listen.

5.5.2

Receiving and Responding to a Private Call (Trunking Only)

A Private Call is a call from one individual radio to another. Other users in the current talkgroup cannot hear the one-to-one call between the two radios. The calling radio automatically verifies that the receiving radio is active on the system and can display the caller ID.

When and where to use:

When you receive a Private Call, you hear two alert tones and the LED blinks green. The display shows `Call received` and the call received icon blinks.

Procedure:

1. Perform one of the following actions:
   - Press the **Menu Select** button directly below `Resp`.
   - Press the **Call Response** button within 20 seconds after the call indicators begin.

   If the caller alias is in the call list, the display shows the caller alias during the call.
   If the caller name is not in the call list, the display shows the caller ID.
2. Press and hold the **PTT** button to talk. Release the **PTT** button to listen.
3. Press ⌂ or the **Call Response** button to hang up and return to the Home screen.

Result:

5.5.3

Receiving and Responding to a Telephone Call (Trunking Only)

This feature allows you to receive calls similar to standard phone calls from a landline phone.

When and where to use:

When you receive a Telephone Call, you hear a telephone-type ringing and the LED blinks green. The display shows `Phone call` and the call received icon blinks.

Procedure:

1. Press the **Call Response** button within 20 seconds after the call indicators begin.
2. Press and hold the **PTT** button to talk. Release the **PTT** button to listen.
3. Press ⌂ or the **Call Response** button to hang up and return to the Home screen.

5.6

Methods to Make a Radio Call

You can select a zone, channel, subscriber ID, or talkgroup by using:

- **MFK** preprogrammed with Channel Change or Zone Change function.
- The **16-Position Select Channel Knob**.
- A preprogrammed button.
- The Contacts list (see Viewing Details of a Contact on page 65).

5.6.1

Making a Talkgroup Call

Procedure:

1. Perform one of the following actions.
   - Turn the **MFK** to select the channel with the desired talkgroup.
   - Turn the **16-Position Select Channel Knob** to select the channel with the desired talkgroup.
2. Hold the radio vertically 1 to 2 inches (2.5 to 5.0 cm) from your mouth.
3. Press the **PTT** button to make the call.

   The radio shows different indicators based on the system the radio is configured.
   - For ASTRO Conventional system, the LED lights up solid red. The display shows the talkgroup alias or ID.
   - For Trunking system, the LED lights up solid red.
4. Wait for the Talk Permit Tone.
5. Speak clearly into the microphone.
6. Release the **PTT** button to listen.

5.6.2

Making a Private Call (Trunking Only)

When and where to use: This feature allows you to send an individual Call Alert or page if there is no answer from the target radio.

Procedure:

1. Perform one of the following actions:
   - To access this feature using a preprogrammed button, press the preprogrammed **Private Call** button to dial the preprogrammed ID (number) and initiate the Private Call. Proceed to step 4.
   - < or > to `Call`, and press the **Menu Select** button directly below `Call`.

     The display shows the last transmitted or received ID.
2. To select the required ID, perform one of the following actions:

- Press the **Menu Select** button directly below `Cnts` to scroll through and select the required ID.
- Press the **Menu Select** button directly below `LNum` to go to the last number dialed.
- ︿ or ﹀ to the required ID.
- Use the **keypad** to enter the required ID.

3. Press the **PTT** button to initiate the Private Call.

   The display shows `Calling... <Number>`.

4. Hold the radio vertically 1 to 2 inches (2.5 to 5.0 cm) from your mouth.

   When you are connected, the display shows the ID of the target radio.

   If no acknowledgment is received, the display shows `No acknowledge`.

5. Press and hold the **PTT** button to talk.Release the **PTT** button to listen.

6. Press 🏠 to return to the **Home** screen.

5.6.3

Making an Enhanced Private Call (Trunking Only)

Prerequisites: Your radio must be preprogrammed to allow you to use this feature.
When and where to use: This feature allows you to send an individual **Call Alert Page** if there is no answer from the target radio. See Sending a Call Alert Page on page 69 for more information.

Procedure:

1. Perform one of the following actions:
   - To access this feature using a preprogrammed button, press the preprogrammed **Enhanced Private Call** button to dial the preprogrammed ID (number) and initiate the Private Call. Proceed to step 4.
   - < or > to `Call`, and press the **Menu Select** button directly below `Call`.
     The display shows the last transmitted or received ID.
2. To select the required ID, perform one of the following actions:
   - Press the **Menu Select** button directly below `Cnts` to scroll through and select the required ID.
   - Press the **Menu Select** button directly below `LNum` to go to the last number dialed.
   - ︿ or ﹀ to the required ID.
   - Use the **keypad** to enter the required ID.
3. Press the **PTT** button to initiate the Private Call.

   The display shows `Calling... <Number>`.

4. Hold the radio vertically 1 to 2 inches (2.5 to 5.0 cm) from your mouth.

   When you are connected, the display shows the ID of the target radio.

   If no acknowledgment is received, the display shows `No acknowledge`.

   If the target radio does not respond before the time out, the display shows `No answer`.

5. Press and hold the **PTT** button to talk. Release the **PTT** button to listen.

6. Press 🏠 to return to the **Home** screen.

5.6.4

Making a Telephone Call (Trunking Only)

This feature allows you to make calls similar to standard phone calls to a mobile or landline phone.

Procedure:

1. Perform one of the following actions:
   - To access this feature using a preprogrammed button, press the preprogrammed **Phone Call** button to dial the preprogrammed phone number. Proceed to step 4.
   - < or > to `Phon`, and press the **Menu Select** button directly below `Phon`.
     The display shows the last transmitted or received ID.
2. To select the required ID, perform one of the following actions:
   - Press the **Menu Select** button directly below `Cnts` to scroll through and select the required ID.
   - Press the **Menu Select** button directly below `LNum` to go to the last number dialed.
   - ︿ or ﹀ to the required phone number.
   - Use the keypad to enter the required phone number.
3. Press the **PTT** button to dial the phone number.
4. Hold the radio vertically 1 to 2 inches (2.5 to 5.0 cm) from your mouth.
5. When your call is answered, press and hold the **PTT** button to talk. Release the **PTT** button to listen.
6. Press ⌂ to return to the **Home** screen.

Result: See Phone Call Displays and Alerts on page 40 for more information if your call is not answered.

5.7

Switching Between Repeater or Direct Operation Button

The Repeater Operation increases the radio coverage area by connecting with other radios through a repeater. The transmit and receive frequencies are different. The Direct or “talkaround operation” allows you to bypass the repeater and connect directly to another radio. The transmit and receive frequencies are the same.

Procedure:

Perform one of the following actions:

- Press the preprogrammed **Repeater/Direct** switch to toggle between talkaround and repeater mode.
- < or > to `Dir` and press the **Menu Select** button directly below `Dir`.

5.8

Monitor Feature

The monitor feature ensures that a channel is clear before transmitting.

The lack of static on a digital channel when you switch from analog to digital radios is not an indication that the radio is malfunctioning. Digital technology quiets the transmission by removing the noise from the signal and allows only the clear voice or data information to be heard.

5.8.1

Monitoring a Channel

When and where to use: Do one of the followings to monitor a channel. You can use these options interchangeably depending on your preference and the programmed functions.

Procedure:

- Monitoring a Channel with **Monitor** button.
  a. Press the preprogrammed **Monitor** button.
  b. Adjust the **Volume Control Knob** if necessary.
  c. Press and hold the **PTT** button to transmit.

     The LED lights up solid red.
  d. Release the **PTT** button to receive (listen).

     The Carrier Squelch indicator appears on the display when you monitor a channel using the preprogrammed **Monitor** button.
- Monitoring a Channel using the selected zone channel.
  a. Select the desired zone and channel.
  b. Listen for a transmission.
  c. Adjust the **Volume Control Knob** if necessary.
  d. Press and hold the **PTT** button to transmit.

     The LED lights up solid red.
  e. Release the **PTT** button to receive (listen).

5.8.2

Monitoring Conventional Mode

This feature allows you to monitor channel traffic on conventional channels by defeating the coded squelch. Thus, you can listen to another active user on the channel. This way, you may be prevented from taking over the conversation of another user.

When and where to use: Your radio may be preprogrammed to receive Private-Line® (PL) calls.

Procedure:

1. Momentarily press the **Monitor** button to listen for activity.

   The Carrier Squelch indicator appears on the display.
2. Press and hold the **Monitor** button to set continuous monitor operation.

   The duration of the button press is programmable.
3. Press the **Monitor** button again, or the **PTT** button, to return to the original squelch setting.

   If you try to transmit on a receive-only channel, you hear an invalid tone until you release the **PTT** button.

Chapter 6

Additional Performance Enhancement

The following performance enhancements are some of the latest creations designed to enhance the security, quality, and efficiency of the radios.

6.1 ASTRO 25 Enhanced Data

ASTRO 25 Enhanced Data is optimized to handle different message sizes and variable update rates from different applications of the radio. To improve data channel efficiency and enable denser network traffic, add Enhanced Data to the Integrated Data system with a software installation.

6.2 Dynamic System Resilience

Dynamic System Resilience (DSR) ensures that the radio system is seamlessly switched to a backup master site dynamically during a system failure. DSR also provides indications such as failure detection, fault recovery, and redundancy within the system. DSR also supports mechanisms related to the Integrated Voice and Data (IV&D), or data centric.

6.3 CrossTalk Prevention

CrossTalk Prevention feature prevents crosstalk scenarios and allows the adjustment of the internal SSI clock rate of the radio. This reduces the possibility of radio frequency interfering spurs.

6.4 Encrypted Integrated Data

Encrypted Integrated Data (EID) provides security encryption and authentication of Integrated Voice and Data (IV&D) bearer service. This bridges the communication between the radio and the Customer Enterprise Network.

6.5 SecureNet

SecureNet allows you to perform secured communications on an Analog or Motorola Data Communication (MDC) channel.

6.6 Over-the-Air Rekeying

The Over-the-Air Rekeying (OTAR) feature allows the dispatcher to remotely reprogram encryption keys in the radio after a rekey request.

Single-system OTAR

This feature allows a radio to be rekeyed by only one Key Management Facility (KMF) or Key Management Controller (KMC).

Multisystem OTAR

This feature allows a radio to be rekeyed by multiple KMFs. After an initial programming, the radio is able to seamlessly move to different secure systems associated to a newly selected channel.

NOTE: This feature must be programmed by a qualified radio technician. For more information, contact your system administrator.

6.7 P25 Digital Vehicular Repeater System

Motorola Solutions offers an MSI Certified APX compatible, third party, P25 Digital Vehicular Repeater System (DVRS). This provides low-cost portable radio coverage in areas where only mobile radio coverage is available.

NOTE: Portable subscriber units enabled in the system for Radio Authentication shall be able to authenticate regardless of whether they are communicating directly on the system or by using a DVRS.

DVRS can also work with SmartConnect to use broadband coverage for the in-vehicle mobile. Portable radios communicate through the in-vehicle mobile to the system through the LTE, Satellite, or Wi-Fi connection. This extends the system coverage when you are away from the vehicle.

6.8 Conventional Talkgroup and Radio Scan Enhancements

Enhancements have been made to the Conventional Talkgroup at the system to improve the Scan feature operation significantly when multiple agencies are using a single conventional radio frequency channel.

These enhancements allow you to use Selective Squelch to operate on only the subset of talkgroups that are relevant to the users rather than all talkgroups on the channel.

The enhancements support the following Scan mode:

- Mixed Vote Scan.
- Standard Conventional Scan.
- Priority Operation.

Up to 30 different talkgroups can be supported using conventional channels. A maximum of four talkgroups can be supported when Vote Scan channels are being used.

Smart PTT is supported with this enhancement as Smart PTT prevents you from transmitting while other users are on the channel.

NOTE: User Selectable Talkgroups are not compatible with this Conventional Talkgroup Enhancement.

Chapter 7

Advanced Features

This chapter explains the operations of the features available in your radio.

7.1 Advanced Call Features

This chapter explains the operations of the call features available in your radio.

7.1.1 Selective Call (ASTRO Conventional Only)

A Selective Call is a call from an individual radio to another individual radio with privacy.

7.1.1.1 Receiving a Selective Call

When and where to use: When you receive a Selective Call, the radio indicates one of the followings:

- You hear two alert tones and the LED lights up solid yellow to indicate the transmitting radio is still sending signal. The call received icons blinks and the display shows `Call received`.
- The LED blinks solid green once to indicate the transmitting radio is pending to receive signal.

The speaker unmutes.

Procedure:

1. Hold the radio vertically 1 to 2 inches (2.5 to 5.0 cm) from your mouth.
2. Press and hold the **PTT** button to talk. Release the **PTT** button to listen.

7.1.1.2 Making a Selective Call

Prerequisites: Your radio must be preprogrammed for you to use this feature.

Procedure:

1. Perform one of the following actions:
   - To access this feature by using a preprogrammed button, press the preprogrammed **Selective Call** button to dial the preprogrammed ID. Proceed to step 3.
   - < or > to `Call`, and press the **Menu Select** button directly below `Call`.
     The display shows the last transmitted or received ID.
2. To select the required ID, perform one of the following actions:
   - Press the **Menu Select** button directly below `Cnts` to scroll through and select the required ID.
   - Press the **Menu Select** button directly below `LNum` to go to the last number dialed.
   - ︿ or ﹀ to the required ID.
   - Use the keypad to enter the required ID.

3. Hold the radio vertically 1 to 2 inches (2.5 to 5.0 cm) from your mouth.
4. Press and hold the **PTT** button to start the Selective Call.

   The display shows the ID of the target radio.

5. Release the **PTT** button to listen.
6. Press to return to the **Home** screen.

7.1.2 Talkgroup Call Feature (Conventional Only)

This feature allows you to define a group of conventional system users so that they can share the use of a conventional channel.

NOTE: Encryption keys are associated to talkgroups. When talkgroups are associated, encryption keys are changed by changing the active talkgroup. See Secure Operations on page 98 for more information.

7.1.2.1 Selecting a Talkgroup

Procedure:

1. < or > to `Tgrp` and press the **Menu Select** button directly below `Tgrp`.

   The display shows the last talkgroup that was selected and stored.

2. Perform one of the following actions:
   - ︿ or ﹀ to `Preset` for the preset preprogrammed Talkgroup.
   - Use the **keypad** to enter the number of the corresponding Talkgroup in the list.
3. Press the **Menu Select** button directly below `Sel` to save the currently selected talkgroup and return to the **Home** screen.

   If the encryption key associated to the new Talkgroup is erased, you hear a momentary key fail tone and the display shows `Key fail`.

   If the encryption key that is associated to the new Talkgroup is not allowed, you hear a momentary key fail tone and the display shows `Illegal key`.

4. Press to return to the **Home** screen.

7.1.3 Sending a Status Call

This feature allows you to send data calls to the dispatcher about a predefined status. Each status can have up to a 14-character name. For trunking, a maximum of eight status conditions is possible. For conventional, a maximum of 16 status conditions is possible.

Procedure:

1. Perform one of the following actions:
   - Press the preprogrammed **Status** button.

- < or > to `Sts` and press the **Menu Select** button directly below `Sts`.

  The display shows the last acknowledged status call, or the first status in the list.

2. Perform one of the following actions:
   - ︿ or ﹀ to the required status.
   - Use the **keypad** to enter a number corresponding to the location in the status list.
3. Press the **PTT** button to send the status.

   When the dispatcher acknowledges, you hear four tones and the display shows `Ack received`. The radio returns to normal dispatch operation.

   If no acknowledgment is received, you hear a low-pitched tone and the display shows `No acknowledge`.

4. Press ⌂ to return to the **Home** screen.

   No traffic is heard on trunked channels while Status Call is selected. If the radio detects no Status Call activity for 6 seconds, an alert tone sounds until you press ⌂ or the **PTT** button.

7.1.4
Making Priority Dispatch Calls

If a talkgroup is congested, the Priority Dispatch feature allows you to call the dispatcher on a different talkgroup. This talkgroup is called the Priority Talkgroup. Each trunking talkgroup can have its own assigned Priority Talkgroup.Priority Dispatch is not available during Emergency operations. Scan feature is suspended when Priority Dispatch is initiated.

Prerequisites: Dispatch console that supports this feature must be preprogrammed to use this feature. Check with your dealer or system administrator for more information on dispatch console supporting this feature.

Procedure:

1. Press the preprogrammed **Priority Dispatch** button.

   A tone sounds and the radio enters Priority Dispatch mode. The radio exits this mode when the Priority Dispatch Time Out Timer expires.

2. Before the Priority Dispatch Time Out Timer expires, press and hold the **PTT** button to transmit.

   The display shows the Priority Talkgroup alias.

3. Release the **PTT** button to listen.

   The radio exits Priority Dispatch mode, returns to its original talkgroup, and displays the home channel alias.

7.1.5
Dynamic Regrouping (Trunking Only)

This feature allows the dispatcher to temporarily reassign selected radios to a particular channel to communicate with each other.

When your radio is dynamically regrouped, it receives a dynamic regrouping command and automatically switches to the dynamically regrouped channel. You hear a tone and the display shows the name of the dynamically regrouped channel.

When the dispatcher cancels dynamic regrouping, the radio automatically returns to the previous zone and channel.

If you access a zone or channel that has been reserved as a dynamically regrouped mode for other users, you hear an invalid tone.

7.1.5.1
Classification of Regrouped Radios

The dispatcher can classify regrouped radios into Select Enabled or Select Disabled categories.

Select Enabled
Select-enabled radios are free to change to any available channel, including the dynamic-regrouping channel, once you have selected the dynamic-regrouping position.

Select Disabled
Select-disabled radios cannot change channels while dynamically regrouped. The radio is forced to remain on the dynamic-regrouping channel.

The Scan and Private Call features are unavailable when your radio is Select Disabled.

7.1.5.2
Requesting a Reprogram (Trunking Only)

This feature allows you to notify the dispatcher when you want a new dynamic regrouping assignment.

Procedure:

Perform one of the following actions:

- Press the preprogrammed **Reprogram Request** button to send a reprogram request to the dispatcher.
- < or > to `Rpgm` then press the **Menu Select** button directly below `Rpgm` to send reprogram request to the dispatcher.

The display shows `Reprogram Rqst` and `Please wait`.

Result:

If you hear five beeps, the dispatcher has acknowledged the reprogram request. The display shows `Ack received` and the radio returns to the **Home** screen.

If the dispatcher does not acknowledge the reprogram request within six seconds, you hear a low-pitched alert tone and the display shows `No acknowledge`. Try again or press ⌂ to cancel and return to the **Home** screen.

7.1.6
Dynamic Zone Programming

Dynamic Zone Programming (DZP) provides one or more Dynamic Zones to store frequently used channels for conventional or trunking.

NOTE: Your radio must be programmed for you to use this feature. At least one zone in the radio must be a nondynamic zone.

7.1.6.1
Entering the Dynamic Zone to Select a Dynamic Channel

Procedure:

1. < or > to `Zone` then press the **Menu Select** button directly below `Zone`.

   The display shows the **Zone** screen.

2. ︿ or ﹀ to `<# Dynamic Zone Channels>`.[2]
3. Perform one of the following actions:
   - Press the **Menu Select** button below `Sel` to select.
   - Press the **Menu Select** button below `Exit` to exit.

   If you have selected one of the Dynamic Zone Channels list, the display returns to **Home** screen with the selected `<# Dynamic Zone Channels>` shown on the screen.

   If you have selected Exit without selecting any Dynamic Zone Channels list, the display returns to **Home** screen without any changes.

7.1.6.2
Saving a Channel in the Dynamic Zone from List Selection

Prerequisites: To perform this operation, the radio must be in the Dynamic Zone.

Procedure:

1. < or > to `ZnPr`. Press the **Menu Select** button directly below `ZnPr` to enter the **Program Zone** screen.
2. Press the **Menu Select** button directly below `Edit`.

   The display shows **Search Options** screen.

3. ︿ or ﹀ to `List Selection`. Press the **Menu Select** button directly below `Sel`.

   The display shows **Select Zone** screen.

4. ︿ or ﹀ to the required zone. Press the **Menu Select** button directly below `Sel`.

   The display shows **Select Chan** screen.

5. ︿ or ﹀ to the required channel. Press the **Menu Select** button directly below `Sel`.

   The display shows `Channel updated`.

6. Press the **Menu Select** button directly below `Exit` to return to **Home** screen.

7.1.6.3
Saving a Channel in the Dynamic Zone from Channel Name

Prerequisites: The radio must be in Dynamic Zone in order to perform this operation.

Procedure:

1. < or > to `ZnPr` then press the **Menu Select** button directly below `ZnPr` to enter **Program Zone** screen.

[2] # indicates number of the channel on the 16-Position Switch which are numbered from 1 to 16.

2. Press the **Menu Select** button directly below `Edit`.

   The display shows **Search Options** screen.

3. ︿ or ﹀ to `Channel Name` then press the **Menu Select** button directly below `Sel`.

   The display shows a blinking cursor on the **Channel Name** screen.

4. Use the **keypad** to type or edit the channel name.
5. Press the **Menu Select** button directly below `Srch` once the entry is done to initiate searching.

   You can cancel this operation at this step by pressing the **Menu Select** button directly below `Cncl` to return to **Search Options** screen.

   The display shows `Searching....` Once found, the display shows `Channel updated`.
   If the radio is triggered to search for an empty entry, the display shows Invalid entry.

   If the entry does not match, the display shows `Channel name not found`. Repeat from step 4 or step 5 to search again.

6. Press ⌂ to return to the **Home** screen.

7.1.6.4
Deleting a Channel in the Dynamic Zone

Prerequisites: To perform this operation, the radio must be in the Dynamic Zone.

Procedure:

1. < or > to `ZnPr` then press the **Menu Select** button directly below `ZnPr` to enter **Program Zone** screen.

   The display shows the dynamic channels list.

2. ︿ or ﹀ to the saved dynamic channel then press the **Menu Select** button directly below `Del`.

   The display shows **Channel deleted** screen.

3. Press the **Menu Select** button below `Exit` to return to **Home** screen.

   The **Home** screen shows `<Dynamic Zone Channels>`.
   If the channel deleted is the Home channel, the **Home** screen shows `<Zone Name>“Blank”`.

7.1.7
Zone-to-Zone Cloning

Zone Cloning clones conventional zones from one radio to another.

You can select the followings zones from a source radio and clone them into a target radio.

- Clone enabled zones
- Dynamic Zones
- Multiple Private Line (MPL)

You can clone the zones by connecting the source radio and target radio with a clone cable. The target radio must be digital, band, and FCC mandate compatible with the source radio.

7.1.7.1
Cloning Zones

Procedure:

1. On the source radio, press the **Menu Select** button directly below `Clon`.
2. Press the **Menu Select** button directly below `Sel` to select source zone.
3. When connecting to the target radio, one of the following scenarios occurs:
   - If the radio is compatible, the radio displays `Target radio connected`. Proceed to step 4.
   - If the radio is not compatible, the radio displays `Target radio incompatible`. Press the **Menu Select** button directly below `Ok` and the radio returns to the previous screen.

   Once connected, the zone clone status is displayed on the right.
4. Press the **Menu Select** button directly below `Next` to accept the source zones selection. One of the following scenarios occurs:
   - If you select a single source zone, press the **Menu Select** button directly below `Sel` to select the target zones for cloning.
   - If you select multi-source zones, the radio displays `Confirm target` and shows the automatically selected target zones and source zones mapping.
   - If the selected multi-source zones exceed the last clonable target zone, the radio displays `<#> src zones unselected` and `Sel exceed max tgt zone` alternatively.
5. Press the **Menu Select** button directly below `Clon` to begin cloning.

   The radio displays `Enter password` if the protected target zone is selected.
6. Enter the password and press the **Menu Select** button directly below `Ok` to start cloning.

Result: The radio displays `Cloning…<Current cloning zone>`. One of the following scenarios occurs:

- If the cloning is successful, a tone sounds, the radio displays `Clone successful` and the source zone alias is displayed on the right.
- If the cloning is not successful, a tone sounds and the radio displays `Clone failed`. Press the **Back** button to enter the source zone list.
- If you press the **Home** button, the radio aborts cloning.

NOTE: The target radio enters programming mode during cloning and resets after cloning is completed.

7.1.8
Multiple Private Line

Multiple Private Line (MPL) is a feature that allows user to modify the PL/DPL codes of the current mode by selecting from a predefined list of codes. For the purpose of accessing different communication sub-groups, repeaters and others, user no longer need to program multiple channels of the same frequency with different PL/DPL codes.

The feature supports the following MPL selection Mode:

Table 6: MPL Selection Mode

Selection Mode	Description
Dynamic	The MPL List selection/functionality is automatically updated (and active on the radio current channel) as users scroll through the available MPL List selections.
Static	While users are scrolling through the radio available MPL List selections, MPL functionality does not change until a new MPL List is manually selected.

7.1.8.1
Selecting Multiple Private Line

Prerequisites: Ensure that this feature is enabled in the codeplug and the radio is in Conventional Mode.

Procedure:

1. Perform one of the following actions:
   - Press the programmable Multiple Private Line (MPL) Side button.
   - From the **Home** screen, tap **More**.
2. Tap the required MPL.

   The Radio Control Widget displays the selected MPL.

7.2
Remote Monitor

This feature allows the Dispatch Operator to turn on the microphone of a targeted radio with a subscriber alias or ID.

When the remote monitor feature is activated, the audio transmission can be configured in Customer Programming Software (CPS) to route the audio to the radio internal microphone, wired Remote Speaker Microphone (RSM), or Bluetooth wireless microphone.

In life-threatening or critical situations, the Dispatch Operator can remotely monitor any audible activity surrounding the targeted radio.

7.3
Contacts

This feature provides address-book capabilities on your radio. Each entry corresponds to an alias (name) and ID (number) that you use to initiate a call. Contact entries are alphabetically sorted according to the entry alias.

Each entry, depending on context (conventional, trunking, or phone), associates with one to five IDs according to the following types of calls:

- Phone Call
- Private Call
- Selective Call
- Call Alert

Each entry within Contacts contains the following information:

- Call Alias (Name)
- Call ID (Number)
- Call Type (Icon)
- WACN ID (ASTRO 25 Trunking IDs only)
- System ID

Your radio must be programmed to allow you to add, edit, or delete the contact entries.

Your radio also supports a maximum of 50 call lists. Each list can store up to 100 IDs.

NOTE: Your radio is programmed with a few contacts per Call Lists. Check with your dealer or system administrator for more information.

7.3.1
Making a Private Call from Contacts

Prerequisites: Your radio must be preprogrammed to allow you to use this feature.

Procedure:

1. < or > to `Cnts` and press the **Menu Select** button directly below `Cnts`.
   The entries are alphabetically sorted.
2. ︿ or ﹀ to the required subscriber alias.
3. Perform one of the following actions:
   - Press the **Menu Select** button directly below `Optn` and proceed to the next step.
   - < or > to scroll through the available IDs for the selected subscriber alias and proceed to step 6.
4. ︿ or ﹀ to `Call` and press the **Menu Select** button directly below `Sel`.
5. ︿ or ﹀ to select the call type.
6. Hold the radio vertically 1 to 2 inches (2.5 to 5.0 cm) from your mouth.
7. Press the **PTT** button to initiate the call.
   During the call, the display shows the subscriber alias.
8. Press and hold the **PTT** button to talk. Release the **PTT** button to listen.
   The LED lights up solid red when the **PTT** button is pressed.

Result:
If there is no voice activity for a preprogrammed period, the call ends.
If the call reaches the maximum ring time, the call ends.

7.3.2
Adding a New Contact Entry

Procedure:

1. < or > to `Cnts` and press the **Menu Select** button directly below `Cnts`.
   The entries are alphabetically sorted.
2. ︿ or ﹀ to `[New Contact]` and press the **Menu Select** button directly below `Sel`.

3. ︿ or ﹀ to `Name` and press the **Menu Select** button directly below `Edit`.

   The display shows `Edit name` and a blinking cursor appears.

4. Use the **keypad** to enter the name and press the **Menu Select** button directly below `Ok` once you have entered the name.

   To cancel this operation, press the **Menu Select** button directly below `Cncl` to return to the previous screen.

5. ︿ or ﹀ to `[Add Number]` and press the **Menu Select** button directly below `Sel`.

6. ︿ or ﹀ to `Number 1` and press the **Menu Select** button directly below `Edit`.

   The display shows `Edit Num 1` and a blinking cursor appears.

7. Use the **keypad** to enter the number and press the **Menu Select** button directly below `Ok` once you have entered the number.

   To cancel this operation, press the **Menu Select** button directly below `Cncl` to return to the previous screen.

8. Perform one of the following actions per the information you need to add to current name:
   - ︿ or ﹀ to `Type 1` and press the **Menu Select** button directly below `Edit`.
     ︿ or ﹀ to the required mode and press the **Menu Select** button directly below `Ok`.
   - Repeat step 6 through step 7 to enter or edit the existing system IDs.
   - Repeat step 5 through step 7 to add a new number.

9. Press the **Menu Select** button directly below `Done` once you have finished.

   The display shows `<Entry> Stored`, confirming that the contact entry has been added.
   The radio returns to the main **Contacts** screen.

7.3.3
Deleting a Contact Entry

Procedure:

1. < or > to `Cnts` and press the **Menu Select** button directly below `Cnts`.

   The entries are alphabetically sorted.

2. ︿ or ﹀ to the entry you want to delete and press the **Menu Select** button directly below `Optn`.

3. ︿ or ﹀ to `Del` and press the **Menu Select** button directly below `Sel`.

   The display shows `<Entry> confirm del?`.

4. Select the **Menu Select** button directly below `Yes` to delete the entry, or `No` to cancel and return to the main screen of Contacts.

   The display shows `<Entry> deleted` and the radio returns to the main screen of Contacts.

7.3.4

Adding a Contact to a Call List

Procedure:

1. < or > to `Cnts` and press the **Menu Select** button directly below `Cnts`.

   The entries are alphabetically sorted.
2. ︿ or ﹀ to the entry you want to add and press the **Menu Select** button directly below `Optn`.
3. ︿ or ﹀ to `Add to CallLst` and press the **Menu Select** button directly below `Sel`.
4. Perform one of the following actions:
   - ︿ or ﹀ to the required Call List and press the **Menu Select** button directly below `Add` to add to the Call List.
   - ︿ or ﹀ to `Cncl` to cancel and return to the main screen of Contacts.

   The display shows `Please wait` momentarily before showing `<Entry> added to Call List`, confirming the addition of the contact to the list.

Result: The radio returns to the main display of **Contacts**.

7.3.5

Removing a Contact from a Call List

Procedure:

1. < or > to `Cnts` and press the **Menu Select** button directly below `Cnts`.

   The entries are alphabetically sorted.
2. ︿ or ﹀ to the entry you want to delete and press the **Menu Select** button directly below `Optn`.
3. ︿ or ﹀ to `Rm frm CallLst` and press the **Menu Select** button directly below `Sel`.

   The display shows `Remove <Entry> frm Call List?`.
4. Press the **Menu Select** button directly below `Yes` to remove the entry from the Call List, or `No` to cancel and return to the main display of **Contacts**.

   The display shows `Please wait` momentarily before showing `<Entry> removed from Call List`, confirming the removal of the contact from the list.

Result: The radio returns to the main display of **Contacts**.

7.3.6

Methods of Contact Editing in a Call List

This feature allows you to edit contacts in a call list.

7.3.6.1

Editing an Entry Alias

Procedure:

1. < or > to `Cnts` and press the **Menu Select** button directly below `Cnts`.

   The entries are alphabetically sorted.

2. ⌃ or ⌄ to the entry you want to edit and press the **Menu Select** button directly below `Optn`.
3. ⌃ or ⌄ to `Edit` and press the **Menu Select** button directly below `Sel`.
4. ⌃ or ⌄ to the entry alias you wish to change and press the **Menu Select** button directly below `Edit`.

   A blinking cursor appears.

5. Use the **keypad** to edit the name and press the **Menu Select** button directly below `Ok` once you have finished.

   The display returns to the **Edit Contact** screen.

6. Press the **Menu Select** button directly below `Done` to save your changes and return to the main screen of **Contacts**.

7.3.6.2
Editing as Entry ID

Procedure:

1. < or > to `Cnts` and press the **Menu Select** button directly below `Cnts`.

   The entries are alphabetically sorted.
2. ⌃ or ⌄ to the entry you want to edit and press the **Menu Select** button directly below `Optn`.
3. ⌃ or ⌄ to `Edit` and press the **Menu Select** button directly below `Sel`.
4. ⌃ or ⌄ to the entry ID you wish to change and press the **Menu Select** button directly below `Edit`.

   A blinking cursor appears.

5. Use the keypad to edit the number and press the **Menu Select** button directly below `Ok` once you have finished.

   The display returns to the **Edit Contact** screen.

6. Press the **Menu Select** button directly below `Done` to save your changes and return to the main screen of **Contacts**.

7.3.6.3
Editing a Call Type

Procedure:

1. < or > to `Cnts` and press the **Menu Select** button directly below `Cnts`.

   The entries are alphabetically sorted.
2. ⌃ or ⌄ to the entry you want to edit and press the **Menu Select** button directly below `Optn`.
3. ⌃ or ⌄ to `Edit` and press the **Menu Select** button directly below `Sel`.
4. ⌃ or ⌄ to `Type` and press the **Menu Select** button directly below `Edit`.
5. ⌃ or ⌄ to choose from the list of call types given and press the **Menu Select** button directly below `Ok`.

   The display returns to the **Edit Contact** screen.

6. Press the **Menu Select** button directly below `Done` to save your changes and return to the main screen of **Contacts**.

7.3.7
Viewing Details of a Contact

Procedure:

1. < or > to `Cnts` and press the **Menu Select** button directly below `Cnts`.

   The entries are alphabetically sorted.
2. ︿ or ﹀ to the entry you want to view and press the **Menu Select** button directly below `Optn`.
3. ︿ or ﹀ to `View` and press the **Menu Select** button directly below `Sel`.

Result: The display shows all the numbers associated with the entry.

7.4
Scan Lists

Scan lists are created and assigned to individual channels or groups. Your radio scans for voice activity by cycling through the channel or group. The sequence of scan is as specified in the scan list for the current channel or group.

Your radio supports different types of Scan Lists:

- Conventional Scan List
- Talkgroup Scan List
- Trunking Priority Monitor Scan List

Refer to a qualified radio technician for the maximum number of Scan Lists to be programmed in your radio.

7.4.1
Intelligent Priority Scan

This feature allows you to add or delete conventional channels and trunking talkgroups from multiple systems into the priority scan lists.

When the radio locks onto a channel in the Intelligent Priority Scan list, the radio scans for higher priority member within the same Trunking or Conventional system.

7.4.2
Viewing a Scan List

Procedure:

1. < or > to `ScnL` and press the **Menu Select** button directly below `ScnL`.
2. ︿ or ﹀ to view the members on the list.
3. Press 🏠 to exit the current display and return to the Home screen.

7.4.3

Editing the Scan List

When and where to use: This feature allows you to change scan list members and priorities.

Procedure:

1. Perform one of the following actions:
   - Long press the preprogrammed **Scan List Programming** button (side button).
   - Move the preprogrammed **Scan List Programming** switch to programming position.
   - < or > to `ScnL` then press the **Menu Select** button directly below `ScnL`.

   The display shows the lists that can be changed.
2. ︿ or ﹀ to the entry you want to edit.
3. Perform one of the following actions:
   - Press the **Menu Select** button directly below `Sel` to add and/or change the priority of the currently displayed channel in the scan list.
   - Press the **Menu Select** button directly below `Del` to delete the currently displayed channel from the scan list.
   - Press the **Menu Select** button directly below `Rcl` to view the next member of the scan list.
4. Perform one of the following actions to select another channel that you want to add or delete then repeat step 3. Otherwise, proceed to the next step.
   - ︿ or ﹀ to the desired channel.
   - Use the keypad to enter the desired channel name.
5. Perform one of the following actions:
   - Move the **Scan List Programming** switch out of programming position.
   - Press ⌂ to exit scan list programming and return to the Home screen.

Result: See Viewing and Changing the Priority Status on page 67 for more information on how to add and/or change the priority of the currently displayed channel in the scan list.

7.4.4

Changing the Scan List Status

Procedure:

1. Perform one of the following actions:
   - Long press the preprogrammed **Scan List Programming** button (side button).
   - Move the preprogrammed **Scan List Programming** switch to programming position.

   The display shows the programming mode icon and the first list member.
2. ︿ or ﹀ to the member you want to edit.
3. Perform one of the following actions:
   - Press the **Select** button once to add the currently displayed channel to the scan list.
   - Press the **Select** button one or more times to change the scan list status icon of the currently displayed channel.

4. Perform one of the following actions:
   - ︿ or ﹀ to select more list members whose scan status you want to change.
   - Use the **keypad** to go directly to that scan list member.
   - Use the **MFK** knob to select another scan list member.
   - Use the **16-Position Select** knob to select another scan list member.
5. Press to exit scan list programming and return to the Home screen.

7.4.5
Viewing and Changing the Priority Status

Procedure:

Perform one of the following actions:

- Press the **Menu Select** button directly below `Sel` one or more times to change the priority status of the current displayed channel.
- Press the **Select** button one or more times to toggle between different status of the Scan List status icon of the current displayed channel.

The radio shows one of following priority status icons and scenarios:

- A **Scan** icon indicates that the current channel is in the scan list as a non-priority channel. The LED lights up solid green.
- A **Priority-One Channel Scan** icon indicates that the current channel is in the scan list as the Priority-One channel. The LED rapidly blinks green. You hear all traffic on the Priority-One channel, regardless of traffic on non-priority channels.
- A **Priority-Two Channel Scan** icon indicates that the current channel is in the scan list as the Priority-Two channel. The LED blinks green.
- No icon indicates that the current channel is deleted from the scan list.

7.5
Scan

This feature allows you to monitor traffic on different channels by scanning a programmed list of channels. Scanning is halted if you initiate a call and resumes when the call has ended.

7.5.1
Turning Scan On or Off

Procedure:

Perform one of the following actions:

- Press the preprogrammed **Scan** button to toggle `Scan On` or `Scan Off` to initiate or stop scan.
- < or > to `Scan` and press the **Menu Select** button directly below `Scan`.

If the scan is enabled, the display shows `Scan on` and the scan status icon.

If the scan is disabled, the display shows `Scan Off`.

Result: The radio returns to the Home screen.

7.5.2 Making a Dynamic Priority Change (Conventional Scan Only)

When and where to use:

While the radio is scanning, the dynamic priority change feature allows you to temporarily change any channel in a scan list (except for the Priority-One channel) to the Priority-Two channel.

This change remains in effect until scan is turned off. Scan then reverts to the default setting.

Procedure:

Making a Dynamic Priority Change using the preprogrammed **Dynamic Priority** button:

a. When the radio locks onto the channel designated as the new Priority-Two channel, press the preprogrammed **Dynamic Priority** button.

   The radio continues scanning the remaining channels in the list.

7.5.3 Deleting a Nuisance Channel

When and where to use:

If a channel continually generates unwanted calls or noise (termed “nuisance” channel), you can temporarily remove the unwanted channel from the scan list.

This capability does not apply to priority channels or the designated transmit channel.

Procedure:

When the radio is locked onto the channel to be deleted, perform one of the following actions:

- Press the preprogrammed **Nuisance Delete** button.
- < or > to `Nuis` and press the **Menu Select** button directly below `Nuis`.

Result: The radio continues scanning the remaining channels in the list.

7.5.4 Restoring a Nuisance Channel

Procedure:

To restore the deleted nuisance channel, perform one of the following actions:

- Stop and restart a scan.
- Mode change to another channel and back to the original channel.
- Turn off the radio and then turn it on again.

7.6 Call Alert Paging

This feature allows your radio to work like a pager.

If other users are away from their radios or if they are unable to hear their radios, you can send them an individual call alert page. You can also verify if a radio is active on the system.

Depending on how your radio is programmed, if there is no answer after the maximum ring time or when you press the **PTT** button for an Enhanced Private Call, the radio automatically sends a call alert page.

NOTE: This feature must be programmed by a qualified radio technician.

7.6.1 Receiving a Call Alert Page

When and where to use: When you receive a Call Alert page, you hear four repeating alert tones and the LED blinks green. The call received icons blinks and the display shows `Page received`.

Procedure:

Press any button to clear the Call Alert page.

Result: See Making a Talkgroup Call on page 47 or Making a Private Call (Trunking Only) on page 47 for more information on returning the call.

7.6.2 Sending a Call Alert Page

When and where to use:

Do one of the following to send a call alert page:

NOTE: If the feature inactivity timer is enabled, your radio automatically exits the feature when your radio is left idle long enough for the time to expire. You hear the Menu Inactive Exit Tone upon feature exit.

Procedure:

- Sending a call alert page using the preprogrammed **Call Alert Paging** button:
  - **a.** Press the preprogrammed **Call Alert Paging** button to send a page to the preprogrammed ID.

    The display shows `Paging...<Number>`.

    If the call alert page is sent successfully, you hear a tone and the display shows `Ack received`. The radio returns to the Home screen.

    If the call alert page is not acknowledged, you hear a low tone and the display shows `No acknowledge`.Press the **Menu Select** button directly below `Ok` to return to the main screen for Contacts.

- Sending a call alert page using the radio menu `Page`:
  - **a.** < or > to `Page`.
  - **b.** Press the **Menu Select** button directly below `Page`.
  - **c.** Press the **Menu Select** button directly below `Cnts` to view the required ID, ︿ or ﹀ to the required ID, or use the **keypad** to enter the required ID.

d. Press the **PTT** button to send the page.

The display shows `Paging...<Number>`.

If the call alert page is sent successfully, you hear a tone and the display shows `Ack received`. The radio returns to the Home screen.

If the call alert page is not acknowledged, you hear a low tone and the display shows `No acknowledge`. Press the **Menu Select** button directly below `Ok` to return to the main screen of **Contacts**.

- Sending a call alert page using the radio menu `Call`:

a. < or > to `Call`.

b. Press the **Menu Select** button directly below `Call`.

c. ︿ or ﹀ to select the alias or ID, and press the **PTT** button to initiate the call.

If the target radio does not respond after a preprogrammed period, the display shows `Send page?`.

d. To send the call alert page, press the **Menu Select** button directly below `Yes`. To exit the screen without sending the call alert page, press the **Menu Select** button directly below `No`.

The display shows `Paging...<Alias>`.

If the call alert page is sent successfully, you hear a tone and the display shows `Ack received`. The radio returns to the Home screen.

If the call alert page is not acknowledged, you hear a low tone and the display shows `No acknowledge`. Press the **Menu Select** button directly below `Ok` to return to the main screen of **Contacts**.

7.7 Recent Calls

Recent call menu allows you to view the recent incoming and outgoing call information.

You can view the information of the following type of calls:

- Call Alert
- Selective Call
- Private Call
- Phone Call (Outgoing Only)
- Emergency Call (Incoming Only)

NOTE: The Log Dispatch Calls Enable field need to be enabled in Customer Programming Software (CPS) for your radio to log the dispatch call.

7.7.1 Viewing Recent Calls

Do one of the following to view recent calls. You can use the options interchangeably depending on your preference and the programmed functions.

Procedure:

- Viewing recent calls using the preprogrammed **Recent Calls** button:

a. Press the preprogrammed **Recent Calls** button.

b. ︿ or ﹀ to scroll through the list.

c. To view the recent Emergency calls, press the **Menu Select** button directly below `Emer`. Press the **Menu Select** button directly below `All` to view back all recent calls.

d. To return to the Home screen, press the **Menu Select** button directly below `Exit`, press ⌂ or the **PTT** button.

- Viewing recent calls using the radio menu:

a. < or > to `Rcnt`.

b. Press the **Menu Select** button directly below `Rcnt` to access the `Recent Calls` feature screen.

c. ︿ or ﹀ to scroll through the list.

d. To view the recent Emergency calls, press the **Menu Select** button directly below `Emer`. Press the **Menu Select** button directly below `All` to view back all recent calls.

e. To return to the Home screen, press the **Menu Select** button directly below `Exit`, ⌂ or the **PTT** button.

7.7.2 Deleting Calls

This feature only supports Model 3.5 and Model 2.5.

This feature allows you to delete calls from the Recent Calls list.

Procedure:

Delete calls by using the following options:

Option	Actions
Deleting all calls	a. Press **Optn**. b. Select **Delete Calls**. c. Select **All Calls**. d. Press **Yes**.
Deleting non-emergency calls	a. Press **Optn**. b. Select **Delete Calls**. c. Select **Non-Emer Calls**. d. Press **Yes**.

Result:

When you have successfully deleted all calls, your display shows `All calls deleted` and the Recent Calls list is empty.

When you have successfully deleted non-emergency calls, your display shows `Non-emer calls deleted` and the Recent Calls list only contains emergency calls.

7.7.3 Instant Recall

This feature allows you to save and play back the recent received calls. All saved calls are removed upon radio power cycle.

7.7.3.1
Saving and Playback Calls

When and where to use:

Perform one of the following to save and play back the recorded calls. You can use the options interchangeably depending on your preference and the programmed functions.

Procedure:

- Playback and saving the recorded calls using the radio menu:
  a. Press the **Menu Select** button directly below `Rcnt`.
  b. ︿ or ﹀ to `Recent Convs` and press the **Menu Select** button directly below `Sel` to view the recent conversations.
  c. ︿ or ﹀ to the required call and press the **Menu Select** button directly below `Play`.

     Radio playback the selected call and auto playback the recorded calls in chronological order.
  d. Press the **Menu Select** button directly below `Stop` to stop the radio playback.
  e. ︿ or ﹀ to the required call and press the **Menu Select** button directly below `Save`.

     Radio displays `Audio Saved` momentarily.
  f. To return to the previous screen, press the **Menu Select** button directly below `Back`.
  g. To return to the Home screen, press the **Menu Select** button directly below `Exit`.

  Recent calls are lost after radio power cycle if the calls are not saved.
- Playback the saved calls using the radio menu:
  a. Press the **Menu Select** button directly below `Rcnt`.
  b. ︿ or ﹀ to `Saved Convs` and press the **Menu Select** button directly below `Sel` to view the recent conversations.
  c. ︿ or ﹀ to the required call and press the **Menu Select** button directly below `Play`.

     Radio playback the selected call and auto playback the saved calls in chronological order.
  d. Press the **Menu Select** button directly below `Stop` to stop the radio playback.
  e. To return to the previous screen, press the **Menu Select** button directly below `Back`.
  f. To return to the Home screen, press the **Menu Select** button directly below `Exit`.
- Saving the recorded calls using the preprogrammed **Record Playback** button:
  a. Long press the preprogrammed **Record Playback** button to save the recorded calls.

     Radio displays `Audio Saved` momentarily.

     Radio plays the saved call automatically if call saving is successful.

     A tone sounds if call saving is not successful.
- Playback the saved calls using the preprogrammed **Record Playback** button:
  a. Short press the preprogrammed **Record Playback** button to playback the saved calls.
  b. Short press the preprogrammed **Record Playback** button again to skip to the next saved call. If there is only a single saved call, the playback skips to the end of the call.

  Radio auto playback the most recent incoming call followed by saved calls in chronological order.

Radio displays the playback status.

NOTE:
Received call overwrites the ongoing record playback. User can short press the programmable button within three seconds to continue the playback and ignore the receiving call.

User can short press the programmable button to trigger playback when the radio is receiving call to overwrite the receiving call.

Playback can be halted by any tone and button press except for specific buttons. Check with your dealer or system administrator for more information.

7.8 In-Call User Alert

This feature allows the radio to remain muted to affiliated talkgroup calls or dispatch calls while operating on the current Trunking Personality or conventional channel respectively.

Group and individual Pages unmute the radio for the alert tone to sound. The radio also unmutes to individual radio-to-radio calls. This feature is very useful when a radio-user prefers not to hear affiliated talkgroup or dispatch calls traffic, but needs-to remain in radio contact. For an In-Call User Alert enabled channel, the Voice Mute button-press or the Voice Mute menu-selection allows the radio-user to toggle on and off Voice Mute functionality.

7.9 Quick Call II

This feature allows you to broadcast a series of distinct and recognizable tones before a voice transmission from the dispatcher or a radio.

The broadcasting dispatcher or radio user can select this programmed Quick Call II tone transmission to be sent to an individual talkgroup or over the entire system. Each tone is distinctive to indicate different situation or different broadcaster.

NOTE: The receiving radio must be configured with the matching Quick Call II tone from the transmitting radio, in order for the receiving radio to sound the selected tone followed by the preconfigured alert tone.

7.9.1 Initiating Quick Call II Transmissions

Prerequisites: Tone must be preprogrammed into the Tone Signaling List on the broadcasting or transmitting radio.

Procedure:

1. < or > to `QCII`, and press the **Menu Select** button directly below `QCII`.
2. ︿ or ﹀ to select the tone to broadcast.
3. Press the **PTT** to broadcast the selected tone, or press and hold the `PTT` to broadcast the selected tone and transmit with your vocal transmission.

   You hear the radio sounds the selected tone. You can begin your call after the tone ends.
4. Release **PTT** to listen.

Result:

7.10 Emergency Operation

The Emergency feature is used to indicate a critical situation. An emergency signal overrides any other communication over the selected channel.

Your radio supports the following Emergency modes:

- Emergency Alarm
- Emergency Call
- Emergency Alarm with Emergency Call
- Silent Emergency Alarm

Only one Emergency mode can be assigned to the **Emergency** button.

Your radio is also programmed to operate in one of the following conditions:

Tactical/Non-Revert
The radio sends an emergency alarm and/or makes an emergency call on the current channel.

Non-Tactical/Revert for Conventional System
The radio reverts to the programmed emergency channel to send an alarm and/or make an emergency call.

Non-Tactical/Revert for Trunking System
The radio reverts to the programmed emergency talkgroup (trunking system) or channel (conventional system) to send an alarm and/or make an emergency call.

For more information, contact your system administrator.

7.10.1 Special Considerations for Emergency Operation

The following scenarios apply during Emergency operation:

Table 7: Emergency Operation Scenarios

Scenario	Outcome
If you press the **Emergency** button while in a channel that has no Emergency capability,	a tone sounds.
If you change to a channel or mode with no Emergency capability while in Emergency operation,	your radio shows the following indications: ● A tone sounds until you select a valid Emergency channel or mode, or until you disable the Emergency operation. ● The display for Model 3.5 and Model 2.5 shows `No emergency`.
If you change to a channel or mode with Emergency capability while in Emergency operation,	the Emergency Alarm and/or Emergency Call continues on the new channel or mode.
If the radio is out-of-range of the system or the emergency alarm is not acknowledged,	your radio shows the following indications: ● A tone sounds. ● The display shows `No acknowledge`.

7.10.2
Emergency Keep-Alive

This feature prevents your radio from turning off when in Emergency mode. If this feature is enabled, you are required to exit Emergency mode before turning off your radio.

7.10.3
Exiting Emergency Operation

If an Emergency operation is triggered on your radio, the dispatch console or radios configured as Supervisor can exit the Emergency operation.

Procedure:

Press and hold the programmed **Emergency** button.

7.10.4
Exiting Emergency as Supervisor (Trunking Only)

Radios configured as Supervisor are able to cancel emergency mode of other radios. The dispatch console must be preprogrammed to use this feature. For more information, contact your system administrator.

Procedure:

Perform one of the following actions:

If...	Then...
If the emergency mode is initiated by other radios,	press and hold the **Side Button 1** and press the **Emergency** button.
If the emergency mode is initiated by the Supervisor,	Perform one of the following actions: • Press and hold the **Emergency** button. • Press and hold the **Side Button 1**, and press the **Emergency** button. • Wait for console to clear emergency.

NOTE: The combinations of the following buttons are supported in your radio:

- Radio **Side Button 1** and **Top (Orange)** button.
- Radio **Side Button 1** and accessory **Orange** button.
- Accessory **1-Dot Button** and radio **Top (Orange)** button.
- Accessory **1-Dot Button** and accessory **Orange** button.

7.10.5
Remote Emergency

The Remote Emergency feature allows you to remotely launch the emergency feature on a target radio.

You can send the Remote Emergency request to radios from recently transmitted or received calls that are stored. The latest Recent Call List refreshes automatically on your radio.

7.10.5.1
Sending Remote Emergency to Specific Users

Procedure:

1. Press the programmed **Remote Emergency** button.
2. Select the required user of the target radio.
3. To send Remote Emergency, press the **PTT** button or press **Send**.

Result:
If the ID of the target radio is valid, your radio displays sending notification and saves the ID as the last Remote Emergency ID.

If the ID of the target radio is invalid, your radio displays an invalid ID notification.

If your radio is in one of the following states, your radio plays a tone.

- Receive-only Channel
- Transmit Inhibit
- Out of Range
- Imbalance Coverage

If your radio receives acknowledgment, your radio displays a positive notification.

If your radio does not receive acknowledgment from the target radio, your radio displays a negative notification.

7.10.5.2
Sending Remote Emergency by Entering the User ID

Procedure:

1. Press the programmed **Remote Emergency** button.
2. Press any digit key.
3. Enter the number of the user ID.
4. To send Remote Emergency, press the **PTT** button or press **Send**.

Result:
If the ID of the target radio is valid, your radio displays sending notification and saves the ID as the last Remote Emergency ID.

If the ID of the target radio is invalid, your radio displays an invalid ID notification.

If your radio is in one of the following states, your radio plays a tone.

- Receive-only Channel
- Transmit Inhibit
- Out of Range
- Imbalance Coverage

If your radio receives acknowledgment, your radio displays a positive notification.

If your radio does not receive acknowledgment from the target radio, your radio displays a negative notification.

7.10.5.3
Manually Refreshing the Remote Emergency List

Procedure:

1. Press the programmed **Remote Emergency** button.
2. To refresh the remote emergency list, press **Rfsh**.

Result: Your radio displays `List refreshed` followed by the updated remote emergency list.

7.10.5.4
Receiving Remote Emergency

The remote emergency is launched only if emergency is enabled on your radio. The receiving radio displays `Emergency`.

Procedure:

To exit the emergency operation, press and hold the programmed **Emergency** button.

7.10.5.5
Filtering Remote Emergency Contacts

This feature allows you to filter contacts.

Procedure:

1. Press the programmed **Remote Emergency** button.
2. Press the **Fltr** menu item button.

Result:
Your radio displays the filtered call list.

7.10.6
Sending an Emergency Alarm

When and where to use: This feature allows you to send a data transmission, which identifies the radio sending the emergency, to the dispatcher.

NOTE: The default timer of **Emergency** button press to activate Emergency is 50 milliseconds. This timer is programmable from 50–6200 milliseconds by a qualified technician.

Procedure:

Press the preprogrammed **Emergency** button.

One of the following scenarios occurs:

- The display shows `Emergency` and the current zone or channel. You hear a short medium-pitched tone and the LED blinks red momentarily.
- The radio sounds a short low-pitched tone to indicate that the selected channel does not support emergency and rejects to launch emergency mode. The display shows `No emergency`, if the selected channel does not support emergency.

Result:
When you receive the dispatcher's acknowledgment, the display shows `Ack received`. Four tones sound, the alarm ends, and the radio exits the Emergency Alarm mode.

If no acknowledgment is received, the display shows `No acknowledge`. The alarm ends when the timer expires and the radio exits the Emergency Alarm mode.

7.10.7 Sending an Emergency Call (Trunking Only)

When and where to use: This feature gives your radio priority access to a talkgroup.

Procedure:

1. Press the preprogrammed **Emergency** button.

   One of the following scenarios occurs:

   - The display shows `Emergency` on the current zone and channel. You hear a short medium-pitched tone and the LED blinks red momentarily.
   - You hear a short low-pitched tone to indicate that the selected channel does not support emergency and rejects to launch emergency mode.

2. Hold the radio vertically 1 to 2 inches (2.5 to 5.0 cm) from your mouth.
3. Press and hold the **PTT** button. Speak clearly into the microphone.
4. Release the **PTT** button to end the transmission and wait for a response from the dispatcher.
5. To exit Emergency Call, press and hold the preprogrammed **Emergency** button for about a second.

7.10.8 Sending An Emergency Call With Hot Mic (Trunking Only)

This feature allows you to send an Emergency Call with hot mic to a group of radios.

When and where to use:

Your radio must be programmed for this type of operation.

Your radio microphone is automatically activated, allowing you to communicate with the group of radios without pressing the **PTT** button. This activated microphone state is also known as hot mic. The hot mic applies to the first voice transmission from your radio during the Emergency call. For subsequent transmissions in the same Emergency call, you must press the **PTT** button.

When indirect PTT such as Hot Mic is activated, the audio transmission can be configured in CPS to route the audio to the radio internal microphone, wired RSM microphone, or Bluetooth wireless microphone.

Follow the procedure to send Emergency Call with hot mic on your radio.

Procedure:

1. Press the preprogrammed **Emergency** button.

   One of the following scenarios occurs:

   - The display shows `Emergency` on the current zone and channel. A tone sounds and the LED blinks red momentarily.
   - A tone sounds to indicate that the selected channel does not support emergency and rejects to launch emergency mode.

2. The microphone remains active for the hot mic time specified in the radio's codeplug programming.
3. To exit Emergency Call, press and hold the preprogrammed **Emergency** button.

7.10.9
Sending an Emergency Alarm with Emergency Call

When and where to use:
This feature gives your radio priority access on a channel for conventional system, and to a talkgroup for trunking system.

Procedure:

1. Press the preprogrammed **Emergency** button.

   If successful, the display shows `Emergency` on the current zone and channel. You hear a short, medium-pitched tone and the LED blinks red momentarily.

   The radio exits Emergency Alarm and enters the Emergency Call state when one of the following scenarios occur:

   - You receive the dispatcher acknowledgment. The display shows `Ack received`.
   - You receive no acknowledgment. The display shows `No acknowledge`.
   - You press the **PTT** button while in the Emergency Alarm mode.

   If unsuccessful, you hear the radio sounds a short low-pitched tone to indicate the selected channel does not support emergency and rejects to launch emergency mode.

2. Hold the radio vertically 1 to 2 inches (2.5 to 5.0 cm) from your mouth.
3. Press and hold the **PTT** button. Speak clearly into the microphone.
4. Release the **PTT** button to end the transmission and wait for a response from the dispatcher.
5. To exit Emergency Call, press and hold the preprogrammed **Emergency** button for about a second.

   Turning off the radio also cancels the emergency state.

7.10.10
Sending An Emergency Alarm and Call with Hot Mic

This feature allows you to send an Emergency Alarm and Call with hot mic to a group of radios.

When and where to use: Your radio must be programmed for this type of operation.
When indirect PTT such as Hot Mic is activated, the audio transmission can be configured in CPS to route the audio to the radio internal microphone, wired RSM microphone, or Bluetooth wireless microphone.

Follow the procedure to send Emergency Alarms and Call with hot mic on your radio.

Procedure:

1. Press the preprogrammed **Emergency** button.

   If successful, the display shows `Emergency` on the current zone and channel. A tone sounds and the LED blinks red momentarily.

   The radio exits Emergency Alarm and enters the Emergency Call state when one of the following scenarios occur:

   - You receive the dispatcher acknowledgment. The display shows `Ack received`.
   - You receive no acknowledgment. The display shows `No acknowledge`.

   If unsuccessful, a tone sounds to indicate that the selected channel does not support emergency and rejects to launch emergency mode.

2. The microphone remains active for the hot mic time specified in your radio's codeplug programming.

3. To exit Emergency Call, press and hold the preprogrammed **Emergency** button.

   Turning off the radio also cancels the emergency state.

7.10.11
Sending a Silent Emergency Alarm

When and where to use: This feature allows you to send an Emergency Alarm to the system without triggering any audio or visual indicators.

Procedure:

1. Press the preprogrammed **Emergency** button.

   The display shows no changes, the LED does not light up, and you hear no tones. The silent emergency state continues until you perform the next step.

2. Perform one of the following actions:
   - Press and hold the preprogrammed **Emergency** button for about a second to exit the Silent Emergency Alarm mode.
   - Press and release the **PTT** button to exit the Silent Emergency Alarm mode and enter regular dispatch or Emergency Call mode.

7.11
Fireground

The portable Fireground Communications System is designed for deployment at an incident scene.

It consists of central components that provide on-scene and in building radio coverage, and enhanced personnel accountability and monitoring:

- Your APX portable radios
- Incident Management Software
- Command Terminal
- Radio Frequency (RF) Modem (Conventional Only)
- Control Channel Radio (Trunking)
- Optional Data Radio (Trunking)
- Accountability Server (Trunking)
- DVRS (Optional)

If you have a critical situation, you can press the Emergency button, which activates an alarm on the Incident Management Software at the command terminal.

The command terminal receives the following status updates from your radio:

- Turning the radio on and off
- Automatic response to Polling
- Response to Evacuation commands
- Pressing the **PTT** button to make voice transmission
- Sending an Emergency Alarm and Call
- Entering or Exiting a Trunking Talkgroup

7.11.1
Entering Fireground Zone Channel (Conventional)

Procedure:

1. Upon powering up, one of the following scenarios occurs:
   - If the Fireground Zone Channel is set as default, you hear the gurgle tone and the radio displays the home screen. You are in Fireground zone channel.
   - Get a qualified technician for assistance.
   - If your home channel is not Fireground Zone Channel, toggle or change the radio zone channel to Fireground Zone Channel.

   If you are entering Fireground Trunking Talkgroup, upon powering up, ensure that the Fireground Trunking Talkgroup is selected. The subscriber unit automatically appears on the Incident Commander's terminal.
2. Listen for a transmission. Adjust the **Volume Control Knob** if necessary.
3. Perform one of the following actions:
   - Press and hold the preprogrammed **Volume Set** button to hear the volume set tone. Adjust the **Volume Control Knob** if necessary. Release the **Volume Set** button.
   - At the desired Fireground zone and channel, press the preprogrammed **Monitor** button and listen for activity. Adjust the **Volume Control Knob** if necessary.
   - If your radio is working in Fireground Zone Channel, proceed to next step.
4. Press and hold the **PTT** button to transmit. The LED lights up solid red while transmitting. Talk into the microphone clearly if needed.
5. Release the **PTT** button to receive.

   You hear a Transmit End Tone.

7.11.2
Responding to Evacuation Indicator

When and where to use: The Incident Commander can trigger one of sixteen Tactical Alerts from the Command Terminal. These alerts can target individuals or groups of users within the Fireground Communication System. The ergonomic (visual and audible) response for the Tactical Alerts can be customized.

Your radio sounds the audible response at the profile maximum alert tone volume level. The display shows the configurable programmed alert text and intelligent lighting.

Procedure:

Perform one of the following actions:

- Press the radio **Top Side** button.
- Press the RSM **Side Button 1** if the radio is connected to RSM.
- Press the **PTT** button. **PTT** button must be configured in Customer Programming Software (CPS) to enable this function.

The radio cancels the indications, a tone sounds and the radio sends an acknowledgment to the command terminal.

NOTE: Move the **Volume Control Knob** to adjust the volume of the audible alert from full volume.

7.12 Sending Evacuation Tone

This feature enables the evacuation tone to be heard on the transmitting radio and on any radio that is able to receive the tone instruction.

Procedure:

Result: Once the tone begins to sound, if the orange button is released the tone continues to alarm on all radios within the talkgroup, until the **PTT** button is released.

NOTE: Radio does not transmit evacuation tone if the radio is in secure mode.

7.13 Tactical Public Safety (Conventional Only)

Tactical Public Safety (TPS) enables the member of a group to identify the start and the end of a transmission by displaying the caller name or ID on the radio display.

7.13.1 Using TPS Normal Transmission

Procedure:

At TPS Zone Channel, perform one of the following actions:

- Press **PTT** button to transmit. Talk clearly into the microphone. Release **PTT** button to listen.
- Receive and listen to call, the radio displays the caller's name or ID.

7.13.2 Using TPS Emergency Transmission

The following are two important alert tones designed for this feature.

Emergency Beacon
If you press the **Emergency** button during an emergency, the radio sounds a Beacon at maximum volume using the radio internal speaker (not adjustable). When pressing the **PTT** button for voice communication, the beacon is muted.

Emergency Call De-Key Sidetone
The radio sounds an alert tone to remind you that the Emergency Mode is still active after you release the **PTT** button for an Emergency call transmission. The volume of loudness depends on the maximum tone volume set in your radio profile.

Procedure:

1. Press the **Emergency** button to enter Emergency Mode.

   The Emergency Beacon tone sounds.

2. Press **PTT** button to make an Emergency Call.
3. Release to listen.

   The Emergency Call De-Key Sidetone sounds. After a short pause, the Emergency Beacon tone sounds.

4. Press and hold the **Emergency** button to exit Emergency mode and cancel Emergency Beacon.

7.14 Fall Alert

Fall Alert is a supporting feature of the Emergency operation. The Emergency feature must be programmed for Fall Alert to operate.

Your radio activates the Fall Alert feature when it achieves or exceeds a tilt angle threshold or a combination of the angle threshold and radio motion below the motion sensitivity level. The radio must stay in this condition for a programmed period before the Emergency Alarm or Call is activated.

NOTE: Because Fall Alert may be triggered accidentally, consider the following scenarios when using your radio:

- If the radio is programmed to a horizontal position only, it must be worn in a vertical position.
- If the radio is programmed with the Fall Alert feature, turn off the radio when charging it with a wall-mounted charger.
- When you dismiss Fall Alert and keep the radio horizontal, no emergency will be sent and no further Fall Alert notification will occur until the device is rotated back to normal (portrait) mode.

7.14.1 Radio Alerts When Fall Alert is Triggered

When Fall Alert is triggered, your radio plays an alert tone, and the display shows `Fall Alert`.

NOTE: If the radio is programmed for Surveillance Mode, the radio inhibits all tones and lights including the Fall Alert tones.

Fall Alert Enhanced

Your radio also supports Fall Alert Enhanced where an alert tone is played for a programmed period. This tone is louder than the programmed minimum level or the current level of the speaker. This tone acts as a beacon to help find the radio.

NOTE: The radio plays this alert tone even in Surveillance Mode.

When the alert tone is active, changing to another channel with a different setup triggers a different response from the radio:

- The alert tone is inhibited when you change to a channel without Emergency feature.
- The alert tone is inhibited when you change to a channel with Emergency but no Fall Alert feature.
- The current alert tone is inhibited and is replaced with a different alert tone when you change to a channel with Emergency feature and a different Fall Alert configuration.
- The alert tone continues when you change to a channel with Emergency and similar Fall Alert configuration.

7.14.2 Testing Fall Alert

Prerequisites: Ensure that Fall Alert feature is configured in your radio.

Procedure:

1. Turn on the radio, and place it in a vertical position for at least 5 seconds.

2. Lay the radio down in a horizontal position.

Result:
Postrequisites: If Fall Alert is configured but the condition does not trigger the activation of the feature, send the radio to a qualified technician.

7.14.3
Exiting Fall Alert

Procedure:

To exit Fall Alert mode, press **Clr**.

7.14.4
Reinitiating Fall Alert

Procedure:

To reinitiate Fall Alert after exiting Emergency Operation, perform one of the following actions:

- Return the radio to a vertical position.
- If motion sensitivity is enabled, shake the radio.

7.15
Automatic Registration Service

Automatic Registration Service (ARS) provides an automated data application registration for your radio. When you turn on the radio, the device automatically registers with the server. Data applications within the fixed network determine the presence of a device on the system and send data to the device.

The ARS consists of the following mode:

- ARS Server Mode (Default mode)
- ARS Non-server Mode

7.15.1
Selecting or Changing the ARS Mode

When and where to use:
The following methods are options on how to select or change the ARS Mode. The result of all the methods is the same. You can use the options interchangeably depending on your preference and the programmed functions.

Procedure:

- Selecting or Changing the ARS mode using the **MFK**:
  a. Once the zone you want is displayed, turn the preprogrammed **MFK** to the desired mode.
- Selecting or Changing the ARS mode using the **16-Position Select** knob:
  a. Once the zone you want is displayed, turn the preprogrammed **16-Position Select** knob to the desired mode.
- Selecting or Changing the ARS mode using the radio menu:

a. < or > to `Chan`.

b. Press the **Menu Select** button directly below `Chan`.

   The display shows the current channel name.

c. ︿ or ﹀ to the required channel or mode.

d. Press `Sel` to confirm the displayed channel.

   One of the following scenarios occur:

   - In ARS Server Mode, the display shows the zone and ARS server channel.
   - In ARS Non-Server Mode, the display shows the zone and ARS non-server channel.
   - If the channel or mode selected is unprogrammed, the display shows `Unprogrammed`.

7.15.2 User Login Feature

This feature allows you to take on a friendly username such as Text Messaging Service (TMS).

You can still send text messages without logging in as a user. The user login feature only enables the recipient of your message to identify you as the sender by assigning a username to your message. This feature is only applicable for Land Mobile Radio (LMR) Messaging.

NOTE: A predefined username that is set more than the maximum allowed characters is an invalid name.

7.15.2.1 Logging In as a User

Procedure:

1. Perform one of the following actions:
   - Press the preprogrammed **User Login** button.
   - < or > to `User` and press the **Menu Select** button directly below `User`.

   The display shows the User Login screen.

2. Perform one of the following actions:
   - ︿ or ﹀ to `[ID Entry]` and press the **Menu Select** button directly below `Edit` to enter ID. A blinking cursor appears on the screen. Use the **keypad** to type or edit a user name. Press the **Menu Select** button directly below `Ok` to submit.
   - ︿ or ﹀ to scroll through the list of predefined user names. Press the **Menu Select** button directly below `Sel` to select the predefined user name.
   - Press and hold ︿ or ﹀ to scroll through the list of predefined user names at a fast scroll rate. Press the **Menu Select** button directly below `Sel` to select the predefined user name.

   If the ID is invalid, the display shows momentary `Invalid ID`.

3. Enter your Personal Identification Number (PIN) number.

4. Press the **Menu Select** button directly below `Logn`.

   One of the following scenarios occurs:

- In ARS Server Mode, the display shows the User Login Indicator icon, the ID, and `In progress`, with `Cncl`.
- In ARS Non-Server Mode, the display shows the User Login Indicator icon, the ID, and `Logged in`, with `Logt` and `Exit`.
- In non-ARS enabled mode, the display shows `Offline`, with `Logt` and `Exit`.

Result: One of the following scenarios occurs:

- If the user name is invalid, login fails and the user login failure indicator (IP indicator) icon blinks. The display also shows `Login failed`.
- If the PIN is invalid, login fails and the user login failure indicator (IP indicator) icon blinks. The display also shows `Login failed`.
- Wait for the logged in confirmation screen. If the login process is successful, the display shows the successful user login indicator (IP indicator) icon and `Logged in`, with `Logt` and `Exit`.

NOTE: To cancel the login process and return to the initial user login screen, press the **Menu Select** button directly below `Cncl`.

7.15.2.2
Logging Out

Prerequisites: When you have logged in or you are using Offline mode, you can log out.
When and where to use:

NOTE: Private data refers to all messages in the text messaging **Inbox**, **Draft**, and **Sent** folder. The next user is able to access the **Inbox**, **Draft**, and **Sent** messages if private data is not deleted.

Procedure:

1. Press the **Menu Select** button directly below `Logt`.

   One of the following scenarios will occur:

   - The display shows `Clear private data?`. Proceed to the next step.
   - If the Delete Messages On Session End feature is enabled, the radio clears the private data and returns to **User Login** screen.

2. Perform one of the following actions:

   - Select `Yes` to clear all your private data. The display shows `Private data cleared`.
   - Select `No` to keep your private data.

7.16
Text Messaging Service

Text Messaging Service (TMS) allows you to send and receive messages and run database queries directly from your radios. The maximum number of characters allowed for a text message is 200 characters.

The types of text messages available are:

- A new text message (free form message).
- A predefined message (quick text message).
- An edited quick text message.

- A query (ASTRO 25 Advanced Messaging Solution).

NOTE: Query is only supported in the ASTRO 25 Advanced Messaging Solution. For more information, see ASTRO 25 Advanced Messaging Solution on page 94 and Two-Factor Authentication on page 95.

7.16.1 Accessing the Messaging Features

Procedure:

1. Perform one of the following actions:
   - Press the **Data Feature** button or the preprogrammed **TMS Feature** button to access the TMS feature screen.
   - Press and hold the **Data Feature** button or the preprogrammed **TMS Feature** button to access the Inbox.
   - Follow the procedure described next to access this feature using the radio menu.
2. < or > to `TMS`.
3. Press the **Menu Select** button directly below `TMS` to access the TMS feature screen.
4. ︿ or ﹀ to scroll through the main menu options.

7.16.2 Composing and Sending a New Text Message

Procedure:

1. < or > to `TMS`.
2. Press the **Menu Select** button directly below `TMS` to access the TMS feature screen.
3. Perform one of the following actions:
   - ︿ or ﹀ to `Compose` and press the **Menu Select** button directly below `Sel`.
   - Press the **Menu Select** button directly below `Exit` to return to the **Home** screen.
4. ︿ or ﹀ to `Text Message` and press the **Menu Select** button directly below `Sel` to compose a new message.

   A blinking cursor appears on the `Compose` screen.
5. Use the keypad to type or edit your message.
6. Press the **Menu Select** button directly below `Optn` once the message is composed.
7. ︿ or ﹀ to `Send Message` and press the **Menu Select** button directly below `Sel`.
8. Perform one of the following actions:
   - ︿ or ﹀ to scroll through the address list and select the required address.
   - ︿ or ﹀ to `[Other Recpnt]` and press the **Menu Select** button below `Edit`. When a blinking cursor appears in the `Enter Address` screen, use the **keypad** to type the address entry.
9. Press the **Menu Select** button directly below `Send` or press the `PTT` button to send the message.

   The display shows the `Send Message` screen and `Sending msg`.

   If the message is sent, you hear a tone and the display shows `Msg sent`.

If the message is not sent, you hear a low tone, the display shows `Send failed` and returns to the main TMS screen.

NOTE: You can append a priority status and/or a request reply to your message. See Priority Status and Request Reply for New Text Messages on page 89 for more information.

You can also select the `Save to Drafts` option to save your message in the Drafts folder to send it at a later time. See Accessing the Drafts Folder on page 92 for more information.

7.16.3

Sending a Quick Text Message

When and where to use:

Quick Text messages are messages that are predefined and usually consist of messages that are used most frequently.

Each Quick Text message or Query has a maximum length of 50 characters. You can select the required text from the Quick Text or Query.

Procedure:

1. Perform one of the following actions:
   - To access this feature using the preprogrammed button, press the preprogrammed **Quick Text** button and proceed to step 4.
   - To access this feature using the menu, proceed to the next step.
2. < or > to `TMS` and press the **Menu Select** button directly below `TMS` to access the TMS feature screen.
3. Perform one of the following actions:
   - ︿ or ﹀ to `Compose` and press the **Menu Select** button directly below `Sel`.
   - Press the **Menu Select** button directly below `Exit` to return to the Home screen.
4. ︿ or ﹀ to `Quick Text` and press the **Menu Select** button directly below `Sel` for a predefined message.
5. ︿ or ﹀ to scroll through the list of messages and press the **Menu Select** button directly below `Sel` to select the required message.

   The message appears on the `Compose` screen, with a blinking cursor at the end of it. Use the keypad to edit the message, if required.
6. Press the **Menu Select** button directly below `Optn`.
7. ︿ or ﹀ to `Send Message` and press the **Menu Select** button directly below `Sel`.
8. Perform one of the following actions to send the message:
   - ︿ or ﹀ to scroll through the address list and select the required address. The message is sent after the address is selected.
   - ︿ or ﹀ to `[Other Recpnt]` and press the **Menu Select** button below `Edit`. When a blinking cursor appears on the `Enter Address` screen. Use the keypad to type the address entry. Proceed to step 9 to send the message.
9. Press the **Menu Select** button directly below `Send` or press the `PTT` button to send the message.

   The display shows the `Send Message` screen and `Sending msg`.

   If the message is sent, you hear a tone and the display shows `Msg sent`.

If the message is not sent, you hear a low tone, the display shows `Send failed` and returns to the main TMS screen.

NOTE: You can append a priority status and/or a request reply to your message. See Priority Status and Request Reply for New Text Messages on page 89 for more information.

7.16.4 Priority Status and Request Reply for New Text Messages

Before sending your message, you can add a priority status, request reply, or both to your message.

7.16.4.1 Appending a Priority Status to a Text Message

Prerequisites: Ensure that an outgoing message is composed to allow you to perform this procedure. See Composing and Sending a New Text Message on page 87 for more information.
When and where to use:

NOTE: The Priority Status icon on a message does not imply that the message gets higher priority over the other messages when it is being transmitted. It is just an indication that can be embedded into a message to let the receiver know that the message is important.

Procedure:

1. Press the **Menu Select** button directly below `Optn`.
2. ︿ or ﹀ to `Mark Important` and press the **Menu Select** button directly below `Sel` to indicate that the message is important.

Result: The priority status icon appears beside the normal message icon on the label bar.

7.16.4.2 Removing a Priority Status from a Text Message

Prerequisites: Ensure there is an outgoing message composed to allow you to perform this procedure. See Composing and Sending a New Text Message on page 87 for more information.

Procedure:

1. Press the **Menu Select** button directly below `Optn`.
2. ︿ or ﹀ to `Mark as Normal` and press the **Menu Select** button directly below `Sel` to remove the priority status from the message.

Result: The display shows the normal message icon on the label bar.

7.16.4.3 Appending a Request Reply to a Text Message

Prerequisites: Ensure that an outgoing message is composed to allow you to perform this procedure. See Composing and Sending a New Text Message on page 87 for more information

Procedure:

1. Press the **Menu Select** button directly below `Optn`.
2. ︿ or ﹀ to `Req Reply` and press the **Menu Select** button directly below `Sel` to request for a reply.

Result: The request reply icon appears beside the normal message icon on the label bar.

7.16.4.4
Removing a Request Reply from a Text Message

Prerequisites: Ensure that an outgoing message is composed to allow you to perform this procedure. See Composing and Sending a New Text Message on page 87 for more information.

Procedure:

1. Press the **Menu Select** button directly below `Optn`.
2. ︿ or ﹀ to `No Req Reply` and press the **Menu Select** button directly below `Sel` to remove the priority status from the message.

Result: The display shows the normal message icon on the label bar.

7.16.4.5
Appending a Priority Status and a Reply Request to a Text Message

Prerequisites: Ensure that an outgoing message is composed to allow you to perform this procedure. See Composing and Sending a New Text Message on page 87 for more information.

Procedure:

1. Press the **Menu Select** button directly below `Optn`.
2. ︿ or ﹀ to `Mark Important` and press the **Menu Select** button directly below `Sel` to indicate that the message is important.
3. ︿ or ﹀ to `Req Reply` and press the **Menu Select** button directly below `Sel` to request for a reply.

Result: The priority status and request reply icons appear beside the normal message icon on the label bar.

7.16.4.6
Removing a Priority Status and a Reply Request from a Text Message

Prerequisites: Ensure that an outgoing message is composed to allow you to perform this procedure. See Composing and Sending a New Text Message on page 87 for more information.

Procedure:

1. Press the **Menu Select** button directly below `Optn`.
2. ︿ or ﹀ to `Mark Important` and press the **Menu Select** button directly below `Sel` to remove the priority status icon.
3. ︿ or ﹀ to `No Req Reply` and press the **Menu Select** button directly below `Sel` to remove the reply status icon.

Result: The display shows the normal message icon on the label bar.

7.16.4.7
Receiving a Text Message

When and where to use:

NOTE: When you receive a message that is flagged with the Request Reply icon, you must manually respond to the sender that you have received the message. The system does not automatically send a notification to acknowledge that the message was received.

Procedure:

Do one of the following to receive a text message. You can use the options interchangeably depending on your preference and the programmed functions.

- Receiving a text message using the **Data Feature** button or the **TMS Feature** button:
  When you receive a message, press and hold the preprogrammed **Data Feature** button or the **TMS Feature** button to access the Inbox.
- Receiving a text message using the radio menu:
  When the new message icon appears and the display shows momentary `New msg`, press the **Menu Select** button directly below `TMS` to access the Inbox.

Result: The display shows a list of aliases or IDs, with the sender of the latest received message on top.

7.16.4.8
Viewing a Text Message from the Inbox

When and where to use: The Inbox can hold up to 30 messages.

NOTE: ︿ or ﹀ to read the message if the content fills more than one screen.

Procedure:

1. Perform one of the following actions:
   - Press the preprogrammed **Data Feature** button or the **TMS Feature** button to access the TMS feature screen.︿ or ﹀ to `Inbox` and press the **Menu Select** button below `Sel`.
   - Press and hold the preprogrammed **Data Feature** button or the **TMS Feature** button to access the Inbox.
   - < or > to `TMS` and press the **Menu Select** button directly below `TMS` to access the TMS feature screen. ︿ or ﹀ to `Inbox` and press the **Menu Select** button below `Sel`.

   The display shows a list of aliases or IDs, with the sender of the latest received message on top.

2. ︿ or ﹀ to the required aliases or ID and press the **Menu Select** button below `Sel` to view the message.

   While on the view message screen, press the **Menu Select** button directly below `Optn`, `Del`, or `Back` to access the option.

   - Select `Optn` to configure the message settings.
   - Select `Del` to delete the message.
   - Select `Back` to return to the previous screen.

   NOTE: The icon at the top right corner of the screen indicates the status of the message. See Status Indicators on page 31 for more information.

7.16.4.9
Replying to a Received Text Message

When and where to use:

NOTE: The original date and time stamp, address, and message content is automatically appended to the reply message.

Procedure:

1. ︿ or ﹀ to the required aliases or ID and press the **Menu Select** button below `Sel` to view the message.
2. Press the **Menu Select** button directly below `Rply` to reply to a message.
3. Perform one of the following actions:
   - ︿ or ﹀ to `Text Message` and press the **Menu Select** button directly below `Sel`.
   - ︿ or ﹀ to `Quick Text` and press the **Menu Select** button directly below `Sel` for a predefined message.
   - ︿ or ﹀ to scroll through the list of predefined messages and press the **Menu Select** button directly below `Sel` to select the required message.

   One of the following scenarios occurs:
   - A blinking cursor appears on the `Compose` screen.
   - The predefined message appears on the `Compose` screen, with a blinking cursor at the end of it.
4. Use the keypad to type or edit your message.
5. Press the **Menu Select** button directly below `Optn` once you have completed the message.
6. ︿ or ﹀ to `Send Message` and press the **Menu Select** button directly below `Sel` to send the message.

Result: The display shows the `Send Message` screen and `Sending msg`.

NOTE:
Press the **Menu Select** button directly below `Back` at any time to return to the previous screen.

You can append a priority status and/or a request reply to your message. See Priority Status and Request Reply for New Text Messages on page 89 for more information.

7.16.4.10
Accessing the Drafts Folder

When and where to use: This folder stores the messages that were saved previously. The Drafts folder can hold up to 10 messages. The oldest draft in the folder is deleted when the 11th message comes in.

Procedure:

1. < or > to `TMS`.
2. Press the **Menu Select** button directly below `TMS` to access the TMS feature screen.
3. ︿ or ﹀ to `Drafts` and press the **Menu Select** button below `Sel`.

   The display shows a list of drafts, with the latest text message drafted on top.
4. ︿ or ﹀ to the required text message and press the **Menu Select** button below `Sel` to view the message.

- Select `Edit` to edit the message before sending it.
- Select `Del` to delete the message.
- Select `Back` to return to the previous screen.

7.16.4.11
Sent Text Messages

The radio saves sent messages in the Sent folder.

The Sent folder stores a maximum of 10 messages. The oldest message in the folder is deleted when the 11th message comes in.

7.16.4.11.1
Viewing a Sent Text Message

Procedure:

1. Perform one of the following actions:
   - Press the preprogrammed **Data Feature** button or the **TMS Feature** button to access the TMS feature screen.
   - ︿ or ﹀ to `TMS` and press the **Menu Select** button directly below `TMS` to access the TMS feature screen.
2. ︿ or ﹀ to `Sent` and press the **Menu Select** button below `Sel`.

   The display shows a list of aliases or IDs, with the recipient of latest sent message on top.
3. ︿ or ﹀ to the required aliases or ID and press the **Menu Select** button below `Sel` to view the message.

   While on the view message screen, press the **Menu Select** button directly below `Optn`, `Del`, or `Back` to access the option.
   - Select `Optn` to configure the message settings.
   - Select `Del` to delete the message.
   - Select `Back` to return to the previous screen.

   NOTE: The icon at the top right corner of the screen indicates the status of the message. See Status Icons on page 33 for more information.

7.16.4.11.2
Sending a Sent Text Message

Procedure:

1. Press the **Menu Select** button directly below `Optn` while viewing the message.
2. ︿ or ﹀ to `Send Message` and press the **Menu Select** button directly below `Sel`.
3. Perform one of the following actions:
   - ︿ or ﹀ to scroll through the address list and select the required address.
   - ︿ or ﹀ to `[Other Recpnt]` and press the **Menu Select** button below `Edit`. When a blinking cursor appears in the `Enter Address` screen, use the **keypad** to type the address entry.

4. Press the **Menu Select** button below `Send` or the **PTT** button to send the message.

   The display shows the `Send Message` screen and `Sending msg`.

   NOTE: Press the **Menu Select** button directly below `Back` at any time to return to the previous screen.

   You can append a priority status and/or a request reply to your message. See Priority Status and Request Reply for New Text Messages on page 89 for more information.

7.16.4.12
Deleting a Text Message

Procedure:

1. From the **Inbox**, **Draft**, or **Sent** screen, ︿ or ﹀ to scroll through the messages.
2. Press the **Menu Select** button directly below `Del` to delete the current message.

7.16.4.13
Deleting All Text Messages

Procedure:

1. Perform one of the following actions:
   - Press the **Data Feature** button or the preprogrammed **TMS Feature** button to access the Messaging feature screen.
   - < or > to `TMS` and press the **Menu Select** button directly below `TMS` to access the `TMS` feature screen.
2. ︿ or ﹀ to `Inbox` or `Sent` then press the **Menu Select** button below `Clr` to select all messages in the selected folder.

   The display shows `Del all?`.
3. Perform one of the following actions:
   - Press the **Menu Select** button directly below `Yes` to delete all the messages in the selected folder.
   - Press the **Menu Select** button directly below `No` to return to the main **TMS** feature screen.

7.17
ASTRO 25 Advanced Messaging Solution

The ASTRO 25 Advanced Messaging Solution allows you to quickly send and receive messages and run database queries directly from your data-enabled Motorola Solutions two-way radios. Federal mandate requires Two-Factor Authentication when querying Federal and State databases.

With Query and Two-Factor Authentication, you can use a secure system log on to initiate and receive key information on people, vehicles, and properties during security patrol. You can access local or external databases such as the National Crime Information Center (NCIC), for "Hot Hits" on priors and warrants. Query and Two-Factor Authentication have Criminal Justice Information Services (CJIS) security compliance for queries.

7.17.1 Two-Factor Authentication

This feature allows you to log in and authenticate yourself with a username, unit ID, password, and passcode.

The user login feature enables the recipient of your message to identify you as the sender by assigning a username to your message. It also supports query authentication requirements so the query service knows which user originated a query.

Two-Factor Authentication allows you to address a specific user of the radio when sending messages so the message is delivered to the user, and not anyone else who is using the radio at the time.

Your user name, unit ID, and password must be provisioned in PremierOne™. Your user account in PremierOne must be linked to an Automatic Registration Server (ARS) account specifying a token to be used with the Two-Factor passcode.

You can upgrade the Single Factor session to a Two- Factor session by entering the Two-Factor passcode only. After an interruption, for example mode change, Dynamic System Resilience (DSR) switch over, or power loss, the radio is able to restore the active session in its current state as long as the session is active in the server.

7.17.1.1 Logging in using the Two-Factor Authentication

Procedure:

1. Perform one of the following actions:
   - Press the preprogrammed **User Login** button.
   - < or > to `User`, and press the **Menu Select** button directly below `User`.

   The display shows the **User Login** screen.

2. Perform one of the following actions:
   - ︿ or ﹀ to `[ID Entry]` and press the **Menu Select** button directly below `Edit`. A blinking cursor appears. Use the **keypad** to type or edit a username. Press the **Menu Select** button directly below `Ok` to submit.
   - ︿ or ﹀ to scroll through the list of predefined usernames. Press the **Menu Select** button directly below `Sel` to select the predefined username.
   - Press and hold ︿ or ﹀ to scroll through the list of predefined usernames at a fast scroll rate. Press the **Menu Select** button directly below `Sel` to select the predefined username.

   If the selected predefined username has more than the maximum allowed characters, or an invalid character in it, the display shows momentary `Invalid ID`.

3. For radio enabled with Unit ID, perform one of the following actions:
   - ︿ or ﹀ to `[UnitID Entry]` and press the **Menu Select** button directly below `Edit`. A blinking cursor appears. Use the **keypad** to type or edit a Unit ID. Press the **Menu Select** button directly below `Ok` to submit.
   - ︿ or ﹀ to scroll through the list of predefined Unit IDs. Press the **Menu Select** button directly below `Sel` to select the predefined Unit ID.
   - Press and hold ︿ or ﹀ to scroll through the list of predefined Unit IDs at a fast scroll rate. Press the **Menu Select** button directly below `Sel` to select the predefined Unit ID.

   If the selected predefined Unit ID has more than the maximum allowed characters, or an invalid character in it, the display shows momentary `Invalid UnitID`.

4. Enter your password when you see a blinking cursor.
5. Press the **Menu Select** button directly below `Logn` or `Ok`.

   If only one-factor is enabled, the display shows `1F logged` at the status. The login operation is complete.

   If login fails, the display shows momentary `Login failed`. The display returns to **User Login** screen.

6. For radio enabled with two-factor login, enter your passcode when you see a blinking cursor.
7. Press the **Menu Select** button directly below `Logn`.

   The display shows `In progress`.

Result: If the login fails, the display shows momentary `2F pscd failed`. Press the **Menu Select** button directly below `Pscd` to re-enter passcode. If successful, the display shows **User Login** screen with `2F logged in` status to indicate Two-Factor Authentication complete.

7.17.1.2
Logging out of Two-Factor Authentication

When and where to use:

NOTE: Private data refers to all messages in the text messaging **Inbox**, **Draft**, and **Sent** folder. The next user is able to access the **Inbox**, **Draft**, and **Sent** messages if private data is not deleted.

Radio that is successfully logged in to the secured system receives advertisement from the server that the access to the data for query is enabled.

Procedure:

1. Press the **Menu Select** button directly below `Logt`.

   One of the following scenarios occurs:

   - The display shows `Clear private data?`.
   - If the Delete Messages On Session End feature is enabled, the display shows momentary `Private data cleared`.

2. Select `Yes` to clear all your private data or select `No` to keep your private data.

   If you select `Yes`, the display shows momentary `Private data cleared`.

7.17.2
Sending a Query

Prerequisites:

This feature is available for radio users who have successfully logged in with the Two-Factor Authentication. Query is a special form of Quick Text marked with a flag that is replied or dispatched in normal TMS message. The query template needs to be configured in the quick test list of the CPS. You can choose from the quick text list, including queries if present.

You shall receive a service advertisement message to indicate the Query is available after you have successfully logged in the radio with a Two-Factor Authentication.

NOTE: The query server must be selected as the destination so that it can receive the query message and respond the query with text message. The query server must be an entry in the data user list in the CPS.

Procedure:

1. Perform one of the following actions:
   - To access this feature using the preprogrammed button, press the preprogrammed **TMS Query** button and proceed to step 5.
   - To access this feature using the menu, proceed to the next step.
2. < or > to `TMS` and press the **Menu Select** button directly below `TMS` to access the TMS feature screen.
3. Perform one of the following actions:
   - ︿ or ﹀ to `Compose` and press the **Menu Select** button directly below `Sel`.
   - Press the **Menu Select** button directly below `Exit` to return to the Home screen.
4. ︿ or ﹀ to `Query` and press the **Menu Select** button directly below `Sel` for a predefined message.
5. ︿ or ﹀ to scroll through the list of messages and press the **Menu Select** button directly below `Sel` to select the required message.

   The message appears on the `Compose` screen, with a blinking cursor at the end of it.
6. Use the keypad to edit the message, if required.
7. Press the **Menu Select** button directly below `Optn`.
8. ︿ or ﹀ to `Send Message` and press the **Menu Select** button directly below `Sel`.
9. Perform one of the following actions:
   - ︿ or ﹀ to scroll through the address list and highlight the required address.
   - ︿ or ﹀ to `[Other Recpnt]` and press the **Menu Select** button below `Edit`. A blinking cursor appears on the `Enter Address` screen. Use the keypad to type the address entry.
10. Press the **Menu Select** button below `Send` or the **PTT** button to send the message.

    The display shows the `Send Message` screen and `Sending msg`.

    If the message is sent, you hear a tone and the display shows `Msg sent`.

    If the message is not sent, you hear a low tone, the display shows `Send failed` and returns to the main TMS screen.

    NOTE: The server responds to your query with the required report in text messages.
    You can append a priority status and/or a request reply to your message. See Priority Status and Request Reply for New Text Messages on page 89 for more information.

7.17.3 Receiving a Query

When and where to use:

The information requested is received in TMS format.

When you receive a query, you hear a unique, high-pitched chirp and the display shows the message icon flagged with “Priority”. The display shows momentary `New msg`.

Procedure:

To access the **Inbox**, press and hold the **Data Feature** button or the preprogrammed **TMS Feature** button or press the **Menu Select** button directly below `TMS`.

Result: The display shows a list of aliases or IDs, with the sender of the latest received message on top.

7.18
Secure Operations

Secure radio operation provides the highest commercially available level of voice security on both trunked and conventional channels.

By default, the radio automatically enters the encrypted environment without having to manually select or clear the secure transmission.

7.18.1
Selecting Secure Transmissions

Procedure:

Turn the preprogrammed **Secure/Clear** switch to the secure position.

- If the selected channel is preprogrammed for clear-only operation, when you press the **PTT** button, you hear an invalid mode tone and the display shows `Clear TX only`.
- The radio does not transmit until you set the **Secure/Clear** switch to the clear position.
- If the “Ignore **Secure/Clear** Switch when Strapped” programming option is enabled, the radio transmits without displaying any messages in the strapped mode of operation, regardless of the **Secure/Clear** switch setting. This option must be preprogrammed by a qualified radio technician.
- The **Secure/Clear** switch only applies when the radio is transmitting.

7.18.2
Selecting Clear Transmissions

Procedure:

Turn the preprogrammed **Secure/Clear** switch to the clear position.

- If the selected channel is preprogrammed for secure-only operation, when you press the **PTT** button, you hear an invalid mode tone and the display shows `Secure TX only`.
- The radio does not transmit until you set the **Secure/ Clear** switch to the secure position.
- You can request to configure the radio to ignore the clear voice or insecured transmission when the radio is in secured transmission. Check with your agent for details.
- If the “Ignore **Secure/Clear** Switch when Strapped” programming option is enabled, the radio transmits without displaying any messages in the strapped mode of operation, regardless of the **Secure/Clear** switch setting. This option must be preprogrammed by a qualified radio technician.
- The **Secure/Clear** switch only applies when the radio is transmitting.

7.18.3
Managing Encryption

This chapter explains the encryption feature on your radio.

7.18.3.1
Loading Encryption Keys

Prerequisites:

- Refer to the *Key Variable Loader (KVL) manual* for equipment connections and setup.

Procedure:

1. Attach the KVL to your radio.

   The display shows `Keyloading` and all other radio functions, except for power down, backlight, and volume, are locked out.

   NOTE:
   If the Multi-system Over-the-Air Rekeying feature is in use, the ASTRO profile name is displayed below `Keyloading`.

2. Select the required keys and press **Load** on the KVL.

Result: The KVL indicates that keyload is successful.

7.18.3.2
Multikey Feature

This feature allows your radio to be equipped with different encryption keys and supports the DES-OFB algorithm.

There are two types of encryption keys:

Conventional Multikey
The encryption keys are strapped on a one-per-channel basis, through Customer Programming Software (CPS). In addition, you can have operator-selectable keys, operator-selectable keysets, and operator-selectable key erasure. If talkgroups are enabled in conventional, then the encryption keys are strapped to the talkgroups.

Trunked Multikey
If both conventional and trunked applications are applied, strap the encryption keys for trunking on a per-talkgroup, or announcement-group basis. Also, a different key can be strapped to other features such as dynamic regrouping, failsoft, or emergency talkgroup. You can have operator-selectable key erasure.

7.18.3.3
Selecting Encryption Keys

Procedure:

1. < or > to `Key`.
2. Press the **Menu Select** button directly below `Key`.

   The display shows the last user-selected and stored encryption key, and the available menu selections. If the Multi-system Over-the-Air Rekeying feature is in use, the list of keys displayed is only for the current secure profile of the selected channel.

3. ︿ or ﹀ to scroll through the encryption keys or use the keypad to enter the number of the desired key.
4. Perform one of the following actions:
   - Press the **Menu Select** button directly below `Sel` to save the newly selected key and return to the **Home** screen.
   - Press 🏠, the **PTT** button, or the **Menu Select** button directly below `Exit`.
   - Turn the **MFK** knob to exit.

- Turn the **16-Position Select** knob to exit.

NOTE: When the selected key is erased, you hear a momentary keyfail tone and the display shows `Key fail`.

When the selected key is not allowed, you hear a momentary illegal key tone and the display shows `Illegal key`.

7.18.3.4

Selecting Keysets

When and where to use: This feature allows you to select one or more groups of several encryption keys from among the available keys stored in the radio.

For example, you could have a group of three keys structured to one keyset, and another group of three different keys structured to another keyset; by changing keysets, you would automatically switch from one set of keys to the other.

Every channel to which one of the original keys was tied now has the equivalent new key instead.

Procedure:

1. < or > to `KSet` and press the **Menu Select** button directly below `KSet`.

   The display shows the last user-selected and stored keyset, and the available keyset menu selections. If the Multi-system Over-the-Air Rekeying feature is in use, the displayed keysets are only for the current secure profile of the selected channel.

2. ︿ or ﹀ to scroll through the keysets or use the keypad to enter the number of the desired keyset.
3. Press the **Menu Select** button directly below `Sel` to save the newly selected keyset.

   The radio exits keyset selection and returns to the **Home** screen.

   NOTE: Press ⌂, the **PTT** button, or the `Exit` menu selection, or turn the **16-Position Select** knob or **MFK** to exit this menu at any time without changing the keyset selection.

7.18.3.5

Erasing Encryption Keys

Do one of the following to erase the selected encryption keys. You can use the options interchangeably depending on your preference and the programmed functions.

If the Multi-system Over-the-Air Rekeying feature is in use, the keys erased are only for the current secure profile of the selected channel. The erase all option operates as configured by the dealer or system administrator. Erasing all keys using the Top (Orange) button and the Top Side (Select) button erases all keys in all keylists in the radio.

Procedure:

- Erasing the selected encryption keys using the radio menu:

  a. < or > to `Eras` and press the **Menu Select** button directly below `Eras`.

     The display shows the last user-selected and stored encryption key, and the available menu selections.

  b. ︿ or ﹀ to the desired encryption key or use the keypad to enter the number of the desired key.

c. Press the **Menu Select** button directly below `Optn`.

   The display shows the available key erase options.

d. ︿ or ﹀ to the required option and press the **Menu Select** button directly below `Sel`.

e. Select `Erase all keys?` or `Erase single key?` by pressing the **Menu Select** button below `Yes` to erase the encryption key(s) in the radio.

   You can return to the previous screen by pressing the **Menu Select** button below `No`.

- Erasing the single key in radios with the single-key option and erasing all keys in radios with the multikey option by using the preprogrammed **Top Side (Select)** button and **Top (Orange)** button:

  a. Press and hold the **Top Side (Select)** button.

  b. While holding **Top Side (Select)** button down, press the **Top (Orange)** button.

     The display shows `Please wait`. When all the encryption keys have been erased, the display shows `All keys erased`.

     NOTE: Do **not** press the **Top (Orange)** button before pressing the **Top Side (Select)** button, unless you are in an emergency situation as this sends an emergency alarm.

7.18.3.6
Requesting an Over-the-Air Rekey

If the Multi-system Over-the-Air Rekeying feature is in use, the rekey request is only for the current selected secure profile.

Prerequisites: Ensure that the Unique Key Encryption Key (UKEK) or Unique Shadow Key (USK) is loaded into the radio with the Key Variable Loader (KVL) before the rekey request can be sent. Refer to your local key management supervisor for more information.

Procedure:

1. < or > to `Reky`.
2. Press the **Menu Select** button directly below `Reky`.
3. Perform one of the following actions:
   - Press the **PTT** button to send the rekey request.
   - Press the **PTT** button again, or the ⌂ or **Emergency** button, to exit the feature and transmit in normal mode.

   If the rekey operation fails, you hear a bad-key tone and the display shows `Rekey fail`.

   NOTE: The rekey operation failure indicates that your radio does not contain the UKEK or USK.

7.18.3.7
MDC OTAR (Conventional Only)

This feature allows you to view or define the Motorola Data Communications (MDC) Over-the-Air Rekeying (OTAR) features. This feature is applied only when operating in secure encrypted mode. In addition to Rekey Requests, OTAR transmissions include Delayed Acknowledgments, and Power-up Acknowledgments.

Some of the selected options require configuration at the Key Management Controller (KMC) site to work properly.

NOTE: This feature must be programmed by a qualified radio technician. For more information, contact your system administrator.

7.18.3.8
Infinite UKEK Retention

This feature enables Unique Key Encryption Key (UKEK) to be permanently stored in the radio even when all the encryption keys are erased. Without this UKEK key, the radio cannot be rekeyed over the air. The Infinite UKEK Retention settings can be different for each secure profile.

NOTE: This feature must be programmed by a qualified radio technician. For more information, contact your system administrator.

7.18.3.9
Hear Clear

Hear-Clear is a noise reduction system that consists of Companding and Random FM Noise Canceller.

Companding

Reduces the channel noise, such as OTA transmission that is predominantly present in UHF2 and 900 MHz channel with the following features:

Compressor

Reduces the background noise flow and the speech signal at transmitting radio.

Expander

Expands the speech while the noise flow remains the same at receiving radio.

Random FM Noise Canceller (Flutter Fighter)

Reduces the unwanted effects of random FM noise pulses caused by channel fading under high Signal-to-Noise (S/N) conditions such as in a moving transportation. The fading effects, heard as audio pops and clicks, are canceled without affecting the desired audio signal.

The Random FM Noise Canceller operates only in receive mode.

NOTE: This feature must be programmed by a qualified radio technician. For more information, contact your system administrator.

7.19
Radio Lock

This Radio Lock feature allows you to lock your radio with a password for security.

The default password is **0123456789**. When you turn on your radio for the first time, you must use the default password to unlock the radio. After successfully unlocking your radio with the default password, your radio prompts you to change the password to a new one.

NOTE: Change the default password to a new one. You can only proceed when the new password is confirmed. This feature is applicable to radios with Secure Hardware Encryption.

The new password must be different from the default password. Your service provider determines the following requirements:

- Number of characters for a password (maximum 10 characters).
- Number of attempts for password entry.

If you exhaust all attempts at entering the correct password, the radio is deadlocked. Restart the radio to start over.

NOTE:
Depending on the configuration, the radio can carry over the number of attempts remaining even after a power cycle. If you exhaust all attempts in this configuration, the following occurs:

- The radio remains inhibited.
- All encryptions and secure keys are erased.

If you forget the password, enter ********** to erase all the keys and revert the password back to the default password.

7.19.1 Enabling or Disabling Radio Lock (Secure Radios Only)

Procedure:

1. < or > to `Logf`.
2. Press the **Menu Select** button directly below `Logf`.

Result: One of the following results occur:

- The display shows `Pswd enabled`, indicating that the radio lock feature is enabled.
- The display shows `Pswd disabled`, indicating that the radio lock feature is disabled.

7.19.2 Changing the Radio Lock Password

Procedure:

1. < or > to `Pswd`.
2. Press the **Menu Select** button directly below `Pswd`.

   The display shows **Change Password** screen.

3. ︿ or ﹀ to `Unlock Pswd`.
4. Press the **Menu Select** button directly below `Sel`.
5. Enter the old password.
6. Press the **Menu Select** button directly below `Ok`.
7. Enter the new password.
8. Press the **Menu Select** button directly below `Ok`.
9. Re-enter the new password.
10. Press the **Menu Select** button directly below `Ok`.

Result:
The password is updated.

If the two passwords do not match, repeat step 5 through step 10.

NOTE: If you enter three incorrect old passwords, the radio exits the password feature. You cannot access this feature again until you turn the radio off and on.

7.19.3
Changing the Tactical Inhibit Password

The Tactical Inhibit Password is required for the Radio Stun and Radio Kill features. You can set up to eight characters for this password.

Procedure:

1. < or > to `Pswd`.
2. Press the **Menu Select** button directly below `Pswd`.

   The display shows **Change Password** screen.
3. ︿ or ﹀ to `Tactical Inh Encode Pswd`.
4. Press the **Menu Select** button directly below `Sel`.
5. Enter the old password.
6. Press the **Menu Select** button directly below `Ok`.
7. Enter the new password.
8. Press the **Menu Select** button directly below `Ok`.
9. Re-enter the new password.
10. Press the **Menu Select** button directly below `Ok`.

    The password is updated.

    If the two passwords do not match, repeat step 5 through step 10.

    NOTE: If you enter three incorrect passwords, the radio exits the password feature. You cannot access this feature again until you turn the radio off and on.

7.20
Radio Stun and Kill

This chapter explains the radio stun and kill features.

7.20.1
Radio Stun

This feature allows you to stun another radio by sending an Over-The-Air command using the menu on your radio. This feature prevents an unauthorized user from using the radio. Once the radio is stunned, a password is required to reactivate the stunned radio.

7.20.1.1
Using Radio Stun

Procedure:

1. < or > to `Stun`.
2. Press the **Menu Select** button directly below `Stun`.

   The display shows `Enter Password`.
3. Use the **keypad** to enter your Tactical Inhibit Encode Password.

4. Press the **Menu Select** button directly below `Ok`.

   The display shows radio Contact IDs.

5. Perform one of the following actions:
   - ︿ or ﹀ to the required ID.
   - Press the **Menu Select** button directly below `LNum` to go to the last number dialed.
   - Use the **keypad** to enter the required ID.
   - Press the **Menu Select** button directly below `Send` to initiate command.

   If the receiving radio does not have encryption key to decrypt the received command, your radio display shows `Ack received`.

   If the receiving radio does not have encryption key to decrypt the received encrypted command, your radio display shows `Decrypt failed`.

   If the receiving radio is powered off or already killed, your radio display shows `No Acknowledgment`.

Result: Once the receiving radio received the command, its screen locked and request for password.

7.20.2 Radio Kill

This feature allows you to render your radio or another radio inoperable if the radio is misplaced or lost. When a radio is killed, the display turns blank, and all functions of the radio are not usable.

The killed radio can only be recovered with a special device. Consult an authorized and qualified technician for details.

7.20.2.1 Using Remote Kill to Kill Another Radio

When and where to use: Remote Kill allows you to render another radio inoperable by sending an over-the-air command using the menu on your radio.

Procedure:

1. < or > to `Kill`.
2. Press the **Menu Select** button directly below `Kill`.

   The display shows `Enter Password`.

3. Use the keypad to enter your Tactical Inhibit Encode Password.
4. Press the **Menu Select** button directly below `Ok`.

   The display shows the radio Contact IDs.

5. Perform one of the following actions:
   - ︿ or ﹀ to the required ID.
   - Press the **Menu Select** button directly below `LNum` to go to the last number dialed.
   - Use the **keypad** to enter the required ID.
   - Press the **Menu Select** button directly below `Send` to initiate command.

   If the receiving radio received the command, your radio display shows `Ack received`.

If the receiving radio does not have encryption key to decrypt the received encrypted command, your radio display shows `Decrypt failed`.

If the receiving radio is powered off or already killed, your radio display shows `No Acknowledgment`.

Result: Once the receiving radio received the command, its screen turns blank, the killed radio is inoperable.

7.20.2.2
Using Direct Kill to Kill Your Own Radio

When and where to use: Direct Kill allows you to make your own radio inoperable.

Procedure:

Press and hold the **Top Side** button then press the **Orange** button until the display turns blank and becomes inoperable.

7.21
Radio Inhibit

This feature allows the system administrator to put a radio into a nonfunctional state when the radio is missing or in an unknown hand. The radio stays in this state regardless of its power changes.

NOTE:
If the radio has Intersystem roaming capability, the system administrator is able to put the radio into a nonfunctional state when the missing radio roams to another system.

The radio can only be uninhibited by receiving an uninhibited command from the system administrator.

7.22
Location

NOTE: The Location feature is addressed as Global Positioning System (GPS) across the manual as the naming convention of the buttons and strings remain the same as the legacy feature of GPS.

The availability and accuracy of this location information and the calculation duration can vary depending on the environment in which you are using the GPS feature. For example, GPS location fixes are difficult to obtain indoors, in covered locations, between high buildings, or in situations where you have not established a clear broad view of the sky.

If adequate signals from multiple satellites are available, your GPS feature only provides an approximate location, usually within 10 meters from your actual location, but sometimes farther away.

Sometimes, the GPS feature cannot complete a location calculation successfully. You will then see a message indicating that your radio cannot connect to enough visible satellites.

To maximize the ability of your radio to determine a fix, take note of the following guidelines:

- For your initial fix, hold the radio in the face position.
- Stay in the open as the GPS feature works best when there is nothing between your radio and the open sky.

7.22.1

Outdoor Location Feature

This feature allows you to determine your current location using a location menu, and your current distance and bearing in relation to another location. Your radio location can be requested and reported over-the-air.

Your radio stores up to a maximum of 60 programmable location coordinates, also known as waypoints. When the memory is full, the next waypoint automatically replaces the earliest waypoints in the radio.

The radio also stores four programmed waypoints. These coordinates cannot be deleted.

The following table shows the differences between programmable waypoints and programmed waypoints.

Programmable Waypoints	Programmed Waypoints
User-configurable location coordinates.	Fixed location coordinates: ● Home ● Emergency ● Last Known Location ● Destination
Only the alias is editable, not the coordinates.	The Home and Destination coordinates are editable.
Coordinates can be deleted one at a time, or all at once.	Coordinates cannot be deleted.

7.22.2

Location Format

This feature allows you to select different display formats of GPS location.

The following GPS location formats are available:

- Latitude/Longitude (DD - Decimal Degrees)
- Latitude/Longitude (DDM - Degrees Decimal Minutes)
- Latitude/Longitude (DMS - Degrees Minutes Seconds)
- MGRS (Military Grid Reference System)
- MRSO Kertau (Malaysian Rectified Skew Orthomorphic System using Kertau Datum)
- MRSO GDM2000 (Malaysian Rectified Skew Orthomorphic System using GDM2000 Datum)
- BRSO Timbalai Sabah (Borneo Rectified Skew Orthomorphic System using Timbalai Sabah Datum)
- BRSO Timbalai Sarawak (Borneo Rectified Skew Orthomorphic System using Timbalai Sarawak Datum)
- BRSO GDM2000 (Borneo Rectified Skew Orthomorphic System using GDM2000 Datum)

NOTE: When you send your location to another radio, the receiving radio displays the location in its selected format.

7.22.3

MGRS Coordinates

Military Grid Reference System (MGRS) can only be enabled through Customer Programming Software (CPS) configuration. When the MGRS coordinate is enabled, all location coordinates are displayed in the MGRS format, including the editable locations in GPS.

7.22.4

Accessing the Outdoor Location Feature

When and where to use:

NOTE: An **ON** radio menu may be present on the Location menu screen if it is preprogrammed by the dealer or system administrator.

Press the preprogrammed **GPS** button to toggle the Outdoor Location feature to on or follow the following procedure to access this feature using the radio menu.

Procedure:

1. < or > to `Loc`.
2. Press the **Menu Select** button directly below `Loc`.

   The display shows `Location off`.
3. Perform one of the following actions:
   - To obtain a location fix, press the **Menu Select** button directly below `On` .
   - Press the **Menu Select** button directly below `Optn`. ︿ or ﹀ to `Turn On GPS` and press the **Menu Select** button directly below `Sel`.

   The front display shows the MGRS or latitude/longitude location, time, and date of the last successful location fix.
4. To obtain a new location fix, press the **Menu Select** button directly below `Rfsh`.

   The top line temporarily displays `Please wait` while the new location is being determined. While the new location is being determined, the location signal can be a solid or blinking icon.

   Once the location coordinates are fixed, the display shows the current location along with the UTC (Zulu) time and date that the location fix was obtained.

   The location coordinates are updated automatically every 5 seconds while the location signal is present.

   If the radio fails to get a location fix, the display shows `No service` and returns to the previous display.
5. To return to the **Home** screen, press ⌂, the **PTT** button, the preprogrammed **GPS** button or the **Menu Select** button directly below `Exit`.

7.22.5

Selecting Location Format

Procedure:

1. < or > to `Loc`.
2. Press the **Menu Select** button directly below `Loc`.

3. Press the **Menu Select** button directly below `Optn`.
4. ︿ or ﹀ to `Loc Format` and press the **Menu Select** button directly below `Sel`.
5. ︿ or ﹀ to the preferred location format and press the **Menu Select** button directly below `Sel`.

Result: The front display shows the location with the selected format.

NOTE: If the SLD99 format is selected and the range is invalid, the display shows `------ ------` on the location. This situation occurs if you are using the radio outside of Sri Lanka and using the SLD99 format. To correct this situation, switch the location display format to other GPS options such as DDM, DMS, UTM/UCS, or MGRS.

7.22.6

Saving a Waypoint

Prerequisites: Ensure that your radio shows the current location on the screen.

Procedure:

1. Press the **Menu Select** button directly below `Optn`.
2. Perform one of the following actions:
   - ︿ or ﹀ to `Save as Waypt` and press the **Menu Select** button directly below `Sel`.
   - ︿ or ﹀ to `Save as Home` and press the **Menu Select** button directly below `Sel` and proceed to step 5.
   - ︿ or ﹀ to `Save as Dest.` and press the **Menu Select** button directly below `Sel` and proceed to step 5.

   A blinking cursor appears on the screen.
3. Use the **keypad** to edit the auto-generated waypoint, if required, or press the **Menu Select** button directly below `Cncl` to return to the Location main screen.
4. Press the **Menu Select** button directly below `Ok` once you are done.

   One of the following scenarios occur:
   - The display shows `Current loc saved as <Waypoint name>`.
   - The display shows `Current loc saved as [Home]`.
   - The display shows `Current loc saved as [Destination]`.
5. To return to the Home screen, press 🏠, the **PTT** button, the preprogrammed **GPS** button, or the **Menu Select** button directly below `Exit`.

7.22.7

Viewing a Saved Waypoint

Prerequisites: Ensure your radio shows the current location on the screen.

Procedure:

1. Press the **Menu Select** button directly below `Optn`.
2. ︿ or ﹀ to `Waypoints` and press the **Menu Select** button directly below `Sel`.

   The display shows a list of waypoints.
3. Perform one of the following actions:

- ⌃ or ⌄ to scroll through the list.
- ⌃ or ⌄ to select a waypoint to view the location information in full.

4. Press the **Menu Select** button directly below `Optn`.
5. To view the MGRS or latitude/longitude location, time and date of the selected waypoint, ⌃ or ⌄ to `View` and press the **Menu Select** button directly below `Sel`.
6. To return to the previous screen, press the **Menu Select** button directly below `Back`, or to return to the Home screen, press ⌂, the **PTT** button, or the preprogrammed **GPS** button.

7.22.8

Editing the Alias of a Waypoint

Prerequisites: Ensure your radio shows the current location on the screen.

Procedure:

1. Press the **Menu Select** button directly below `Optn`.
2. ⌃ or ⌄ to `Waypoints` and press the **Menu Select** button directly below `Sel`.
   The display shows a list of waypoints.
3. ⌃ or ⌄ to the required saved waypoint, and press the **Menu Select** button directly below `Optn`.
4. ⌃ or ⌄ to `Edit name` and press the **Menu Select** button directly below `Sel`.
   A blinking cursor appears in the `Edit Name` screen.
5. Use the **keypad** to edit the alias.
6. Perform one of the following actions:
   - Press the **Menu Select** button directly below `Ok` once you are done.
   - Press the **Menu Select** button directly below `Cncl` to return to the Waypoints main screen.
7. The display shows `<Waypoint name> Updated` and the radio returns to the Waypoints main screen.
8. Perform one of the following actions:
   - Press the **Menu Select** button directly below `Back` to return to the previous screen.
   - Press ⌂, the **PTT** button, or the preprogrammed **GPS** button to return to the Home screen.

7.22.9

Editing the Coordinates of a Waypoint

When and where to use:

NOTE: You can only edit preprogrammed coordinates of Home and Destination.

Ensure that your radio shows the current location on the screen.

Procedure:

1. Press the **Menu Select** button directly below `Optn`.
2. ⌃ or ⌄ to `Waypoints` and press the **Menu Select** button directly below `Sel`.
   The display shows a list of waypoints.

3. Perform one of the following actions:
   - ⌃ or ⌄ to `[Home]` and press the **Menu Select** button directly below `Optn`.
   - ⌃ or ⌄ to `[Destination]` and press the **Menu Select** button directly below `Optn`.
4. ⌃ or ⌄ to `Edit location` and press the **Menu Select** button directly below `Sel`.

   The first number blinks.
5. Utilize the following control buttons to select the number/coordinates if required, then press the **Menu Select** button directly below `Edit` to change the number/coordinates.
   - Press < to move to the previous number/coordinates.
   - Press > to move to the next number/coordinates.

   A blinking cursor appears in the `Edit Location` screen.
6. Utilize the following control buttons or menu to change the number/coordinates if required then press the **Menu Select** button directly below `Ok` once.
   - Press < to move one space to the left.
   - Press > to move one space to the right.
   - Press the **Menu Select** button directly below `Del` to delete any unwanted characters.
   - Press the **Menu Select** button directly below `Cncl` to return to the previous screen
7. Press the **Menu Select** button directly below `Ok` once complete setting up the new Home or Destination.

   One of the following scenarios occurs:
   - The display shows `[Home] Updated` and the radio returns to the Waypoints main screen.
   - The display shows `[Destination] Updated` and the radio returns to the Waypoints main screen.

7.22.10

Deleting a Single Saved Waypoint

Prerequisites: Ensure your radio shows the current location on the screen.

Procedure:

1. Press the **Menu Select** button directly below `Optn`.
2. ⌃ or ⌄ to `Waypoints` and press the **Menu Select** button directly below `Sel`.

   The display shows a list of waypoints.
3. Perform one of the following actions:
   - ⌃ or ⌄ to the required saved waypoint, and press the **Menu Select** button directly below `Optn`.< or > to `Edit name` and press the **Menu Select** button directly below `Del`.
   - Press the **Menu Select** button directly below `Del`.
4. The display shows `Delete <Waypoint name> Confirm?`.
5. Press the **Menu Select** button directly below `Yes` to delete the waypoint or press the **Menu Select** button directly below `No` to return to the Waypoints main screen.

Result: The display shows `<Waypoint name>deleted`.

7.22.11

Deleting All Saved Waypoints

Prerequisites: Ensure your radio shows the current location on the screen.
When and where to use:

NOTE: You cannot delete any of the preprogrammed waypoints.

Procedure:

1. Press the **Menu Select** button directly below `Optn`.
2. ︿ or ﹀ to `Waypoints` and press the **Menu Select** button directly below `Sel`.

   The display shows a list of waypoints.
3. ︿ or ﹀ to the required saved waypoint, and press the **Menu Select** button directly below `Optn`.
4. ︿ or ﹀ to `Delete All` and press the **Menu Select** button directly below `Sel`.

   The display shows `Delete All saved waypnts Confirm?`.
5. Press the **Menu Select** button directly below `Yes` to delete all waypoints or press the **Menu Select** button directly below `No` to return to the Waypoints main screen.

Result: The display shows `All saved waypnts deleted`.

7.22.12

Measuring the Distance and Bearing from a Saved Waypoint

Prerequisites: Ensure your radio shows the current location on the screen.

Procedure:

1. Press the **Menu Select** button directly below `Optn`.
2. ︿ or ﹀ to `Dist frm here` and press the **Menu Select** button directly below `Sel`.

   The display shows a list of waypoints.
3. ︿ or ﹀ to the required waypoint and press the **Menu Select** button directly below `Sel`.

Result: The display shows the distance and bearing from the current to the selected coordinates.

7.22.13

Location Feature in Emergency Mode

When the Emergency feature is activated, the radio exits the Location menu and returns to the Home screen.

You can view the channel that triggers the emergency signal.

You can reenter the Location menu while still in Emergency mode as long as Silent Emergency is not activated.

If you have disabled the Location feature on your radio, it automatically turns back on when Emergency mode is activated.

If there is a solid location signal during Emergency operation, the current location and the location information received is saved as Emergency and Last Known Location respectively.

7.22.14
Peer-Location on the Display (ASTRO Conventional)

This feature is only available for radio-to-radio voice transmissions, dispatch call, and selective call.

The transmitting radio and receiving radio must be configured to enable the sending and receiving of the Global Positioning System (GPS) coordinates.

NOTE: If the receiving radio is operating in a Mixed Mode channel and the voice transmission is from the conventional ASTRO system, the radio can only receive the peer-location coordinates.

This feature is operable in a Scan Active channel, or Scan Talkback channel.

After receiving a voice transmission with GPS coordinates enabled on the receiving radio, the display shows the available full location, or short location coordinates.

Full location coordinates

- PTT ID (optional)
- Longitude and latitude
- Relative distance or direction

Short location coordinates

- PTT ID (optional)
- Longitude and latitude

NOTE:
If the transmitting radio is stale at the location after a period of time, the receiving radio display shows the last known location. If the transmitting radio does not have GPS, or the receiving radio could not decode the GPS signal of the received signal, the receiving radio display shows the location as unknown.

7.23
Mission Critical Geofence (ASTRO 25 Trunking)

This feature allows your radio to use the Global Positioning System (GPS) receiver to determine its location at frequent intervals, and evaluate if the radio is within the Geofence area in real time. Geofence is a virtual perimeter based on the GPS to define a geographical area on earth.

When your radio enters the predefined Geofence area, your radio receives the Dynamic Regroup command from the system, and immediately connects to a Dynamic Regroup talkgroup. The radio display shows the new selected Dynamic Regrouped talkgroup with green intelligent light for your attention. Voice Announcement is also available to support this feature.

Any new text messages received at Geofence are displayed immediately on the radio display.

NOTE:
If the radio is set up in DVRS, only mobile radio is supported for this feature.

7.23.1
Entering the Geofence Area

Prerequisites: The Voice Announcement and TMS display in this feature are optional. They must be configured to enable you to hear and see these indicators.
When and where to use: When the radio enters a Geofence area, the radio immediately sends a message `ACK` back to the system.

The radio searches the current zone for the channel with same talkgroup assigned as the Dynamic Talkgroup and also with same system ID of current trunk system. Once matched, the radio display shows the first matched and connected channel alias.

If there is no channel with matching Talkgroup ID and trunk system ID, the radio display shows the channel alias of `<DYNAMIC talkgroup>`.

Once the radio is connected, you hear a dynamic regroup tone, the radio display shows `<DYNAMIC channel>` with the temporary green color intelligent backlight and you hear a Voice Announcement.

NOTE:
When the radio loses the GPS signal, the GPS icon blinks and the radio sounds two high-pitched tones repetitively to indicate that the GPS has failed to operate. The radio display shows the red intelligent light.

If the first matched channel is not configured with Voice Announcement, no Voice Announcement is played.

The system sends a message to your radio. The radio display shows a direct text message content without any user operation. This message indicates that you are currently present in a Geofence area. This TMS remains open on the display until user presses exit/home to exit this screen.

NOTE: If there is another incoming text message before you exit the previous message, the message screen is refreshed to show the latest message.

The following procedure guides you to exit the text message received.

Procedure:

Press the **Menu Select** button below `Exit` or to return to **Home** screen.

Result:
The other operations are the same as normal dynamic regroup command.

When the radio exits the Geofence area, your radio reverts to original channel or newly assigned talkgroup. The radio display shows the new channel together with Voice Announcement to indicate the changes. Voice Announcement of the new channel only works if that channel is configured with Voice Announcement.

7.23.2
Mission Critical Geofence

This feature allows the radio to use the GPS receiver to determine radio location at frequent intervals and evaluate if the radio is within the Geofence area in real time.

Check with your dealer or qualified technician to program the geofence coordinates and actions.

7.23.3
Entering Mission Critical Geofence

When and where to use:
When the radio enters the predefined Geofence area, the radio displays `<Geofence Alias>` with the intelligent backlight and you hear a Voice Announcement. Zone and channel alias of the Geofence area is displayed. If the radio is set to manual, you can choose either to proceed with zone and channel change or cancel the change.

The radio then connects to the designated talkgroup. The radio displays the talkgroup alias and dynamic regroup tone sounds. The transmit power level changes and the radio shows a direct text message content without any user operation.

NOTE:
The availability of the Voice Announcement (VA), TMS display, Intelligent Backlight, and Transmit Power Level alerts depend on your radio configuration. The VA can be programmed to alert continuously or momentarily.

If Site Selectable Alert (SSA) is enabled, the radio mutes any alert that is received when entering the Geofence area and unmutes when exiting.

7.23.4
Exiting Mission Critical Geofence

When and where to use:
When the radio exits the Geofence area, the radio reverts to the original transmit power level, intelligent lighting, channel, or newly assigned talkgroup. Voice announcement is canceled or you hear a preprogrammed VA tone. The radio displays the new channel and a message is received to indicate the changes.

7.24
Trunking System Controls

This chapter explains the trunking system control features in your radio.

7.24.1
Operating in Failsoft System

When and where to use:
The failsoft system ensures continuous radio communication during a trunked system failure. If a trunking system fails completely, the radio goes into failsoft operation and automatically switches to its failsoft channel.

During failsoft operation, your radio transmits and receives in conventional operation on a predetermined frequency. You hear a medium-pitched tone and the display shows `Failsoft`.

When the trunking system returns to normal operation, your radio automatically leaves failsoft operation and returns to trunked operation.

To continue in Failsoft and to communicate with other talkgroups, refer to the following procedure.

Procedure:

1. Rotate the **16–Position Select Knob** to change to a different repeater frequency.
2. Press the **PTT** button to talk, and release the button to listen.

7.24.2
Imbalanced Coverage

Imbalanced coverage occurs when the radio is able to receive the control channel but is unable to transmit back to the system. The radio generates a periodic tone and displays `No Comms`.

7.24.3
Out-of-Range Radio

Your radio can no longer lock onto a control channel when out-of-range from the system.

When out-of-range, your radio shows the following indications:

- A tone sounds.
- The display shows the currently selected zone or channel combination, and out-of-range notification.

Your radio remains in this out-of-range condition until it locks onto a control channel or failsoft channel, or if it is turned off.

7.24.4
Site Trunking Feature

If the Zone Controller loses communication with any site, that site reverts to site trunking. When this occurs, you can communicate only with the radios within your trunking site.

The display shows the currently selected zone or channel, and the site trunking message.

7.24.5
Site Search

When searching for a site, your radio is inoperable. In the site search mode, your radio scans for trunked control channels but has yet to connect to the trunking system or reach other trunking states. Other trunking states are such as Out of Range and Imbalanced Coverage.

The `Searching site` indicator alerts you that your radio is attempting to search for a valid trunked control channel.

7.24.6
Locking and Unlocking a Site

When and where to use: This feature allows your radio to lock onto a specific site and not roam among wide-area talkgroup sites. This feature should be used with caution, since it inhibits roaming to another site in a wide-area system.

You can toggle the lock state between locked and unlocked by pressing the preprogrammed **Site Lock/Unlock** button.

Follow the procedure to lock and unlock a site using the radio menu.

Procedure:

1. < or > to `Site`.
2. Press the **Menu Select** button directly below `Site`.
3. Perform one of the following actions:
   - To lock the site, press the **Menu Select** button directly below `Lock`. The display shows `Site locked`.

- To unlock the site, press the **Menu Select** button directly below `Unlk`. The display shows `Site unlocked`.

Result: The radio saves the new site lock state and returns to the Home screen.

7.24.7
Viewing the Current Site

Procedure:

1. Perform one of the following actions:
   - Press the preprogrammed **Site Displ/Srch** button.
   - < or > to `RSSI` and press the **Menu Select** button directly below `RSSI`.
2. Press the programmed **Site Displ/Srch** button.

Result: The display shows momentarily the name of the current site and its corresponding received RSSI.

7.24.8
Changing the Current Site

Procedure:

Perform one of the following actions:

- Press and hold down the preprogrammed **Site Displ/Srch** button.
- Press and hold down the **Menu Select** button directly below `RSSI`.

You hear a tone and the display shows momentary `Scanning site`.

Result: When the radio finds a new site, it returns to the Home screen.

7.25
Mission Critical Wireless Bluetooth® Wireless Technology

This feature allows you to extend your radio functionality by connecting to external Bluetooth accessories. Use Motorola Solutions proprietary Operations Critical Wireless (OCW) devices with radios during critical operations. Other Bluetooth devices may or may not perform to the required standard.

Your radio supports the following Bluetooth enabled devices or profiles:

- Headset (HSP)
- Dial Up Networking (DUN)
- Personal Area Networking (PAN)
- Serial Port (SPP)
- General Attribute Profile (GATT)

7.25.1

Pairing with Low Frequency-Motorola Proximity Pairing (LF-MPP) Feature

Prerequisites:

Ensure that Bluetooth feature of your radio is on and the Bluetooth tones are enabled.

Bluetooth tones, Bluetooth menu and preprogrammed buttons must be preprogrammed by a qualified radio technician. Check with your dealer or system administrator for more information.

When and where to use: The range of Bluetooth operation when using a MCW accessory is 10 meters line-of-sight communication. This is an unobstructed path between the location of the signal transmitter (your radio) and the location of the receiver (your device or accessory).

Obstacles that can cause an obstruction in the line-of-sight include trees, buildings, mountains, cars, and others.

For high degree of reliability, Motorola Solutions recommends to **NOT** separate the radio and the accessory.

At the fringe areas of reception, both voice and tone quality will start to sound "garbled" or "broken". To correct this problem, simply position the accessory and radio closer to each other (within the 10 meter defined range) to re-establish clear audio reception.

NOTE: Once a COTS headset is paired to your radio, it is always connected. Therefore the battery life of the accessory is aligned with the Talk Time power consumption, not the Standby Time consumption.

Procedure:

1. Turn on the accessory.
2. Place the accessory close to the radio aligning the Bluetooth Pairing Location (a blue dot) on the radio to the Bluetooth Pairing Location (a blue dot) on the accessory.

   If the pairing process is successful, you hear an incremental-pitched tone. The radio begins to connect to the device.

   If the pairing process fails, you hear a short, low-pitched tone. The display shows `Bluetooth pairing failed`. Repeat this step.

Result:

The radio tries to establish connection with the device once paired.

NOTE: If the connection fails within 6 seconds, you hear a decremental-pitched tone to indicate that the device is unpaired. The display shows `<Device Type> unpaired`. Repeat this step to re-initiate the pairing process.

If the connection is successful, you hear an incremental-pitched tone. The display shows `<Device Type> connected` and the Bluetooth icon turns from to .

If the radio has the pairing record of the device and the connection fails, you hear a short, low-pitched tone. The display shows `<Device Type> connect failed`.

7.25.2

PIN Authentication in Pairing

This feature allows your radio to verify the correct device to pair with using PIN authentication.

NOTE: The PIN authentication method is only applicable for Bluetooth version 2.1 and above.

7.25.2.1
Pairing the Authentication PIN when Receiving a Pairing Request

Procedure:

1. When the radio display shows `<Device Friendly Name> pair request`, perform one of the following actions:
   - To accept, press the **Menu Select** button below `Ok`.
   - To reject, press the **Menu Select** button below `Cncl`.

   Your radio only supports HSP, DUN, PAN, and SPP Bluetooth profiles.

   When the pairing timer expires, the display shows `<Device Friendly Name> pair canceled` and return to Home screen.

   If you choose to accept the pairing process, the display shows `Compare PIN: XXXXXX`.

   If you choose to reject the pairing process, the display shows `Cancel pairing in progress...` followed by `<Device Friendly Name> pair canceled` and return to Home screen.

2. Perform one of the following actions when the display shows `Compare PIN: XXXXXX`.:
   - Press the **Menu Select** button below `Ok` if the PIN is correct.
   - Press the **Menu Select** button below `Cncl` to reject if the PIN number is incorrect. The display shows `Cancel pairing in progress...` followed by `<Device Friendly Name> pair canceled` and return to Home screen.

   When the PIN authentication timer expires, the display shows `<Device Friendly Name>pair canceled` and return to Home screen.

   If successful, the display shows `Pairing in progress....`, `<Device Friendly Name> paired` followed by `<Device Friendly Name>connected`.

   If unsuccessful, one of the following scenarios will occur:
   - The display shows `<Device Friendly Name> pair failed` (if the pairing timer expires).
   - The display shows `<Device Friendly Name> connect failed` (if the connecting timer expires).

   If the PIN is correct but the profiles are not supported, the display shows `BT profiles not supported`. The display returns to Home screen.

7.25.2.2
Pairing the Authentication PIN with the Generated Numeric PIN

Prerequisites: Follow the procedure in Searching and Pairing the Bluetooth Device to search for available Bluetooth devices. Start pairing with the Authentication PIN by following the steps described next.

Procedure:

1. ︿ or ﹀ to the required device. Press the **Menu Select** button directly below `Sel` to initiate pairing.

   Your radio only supports HSP, DUN, PAN, and SPP Bluetooth profiles.

   If successful, the display shows `Pairing in progress...` followed by a randomly generated numeric PIN, `Compare PIN: XXXXXX`.

   If unsuccessful, the display shows `BT profiles not supported`. The display returns to **Available Dev** screen.

2. Press `Ok` to continue pairing the radio and the device.

   The pairing process can be canceled by pressing the **Menu Select** button below `Cncl`.

   If successful, the display shows `Pairing in progress`,`<Device Friendly Name> paired`, `Connecting in progress...` followed by `<Device Friendly Name>connected`. The display returns to the Bluetooth feature screen.

   If unsuccessful, one of the following scenarios will occur:

   - The display shows `<Device Friendly Name> pair failed` (if the PIN numbers are different).
   - `<Device Friendly Name> connect failed` (if the connection fails).

   The display returns to **Available Dev** screen.

7.25.2.3
Pairing the Authentication PIN by Manually Keying in the Same PIN

Prerequisites: Follow the procedure in Searching and Pairing the Bluetooth Device to search for available Bluetooth devices. Start pairing with the Authentication PIN by following the steps described next.

Procedure:

1. ︿ or ﹀ to the required device. Press the **Menu Select** button directly below `Sel` to initiate pairing.

   Your radio only supports HSP, DUN, PAN and SPP Bluetooth profiles.

   If successful, the display shows `Pairing in progress...` followed by a request for PIN number. A blinking cursor appears below the `Enter PIN:`.

   If unsuccessful, the display shows `BT profiles not supported`. The display returns to **Available Dev** screen.

2. Use the **keypad** to enter the PIN. Press < to move one space to the left. Press > to move one space to the right. Press the **Menu Select** button directly below `Del` to delete.
3. Press `Ok` to continue pairing the radio and the device. Enter the same PIN number on the device.

   The pairing process can be canceled by pressing the **Menu Select** button below `Cncl`.

   If successful, the display shows `Pairing in progress`,`<Device Friendly Name> paired`, `Connecting in progress...` followed by `<Device Friendly Name>connected`. The display returns to the Bluetooth feature screen.

   If unsuccessful, one of the following scenarios will occur:

   - The display shows `<Device Friendly Name> PIN auth fail` (if the PIN numbers are different).
   - `<Device Friendly Name> connect failed` (if the connection fails).

   The display returns to **Available Dev** screen.

7.25.3
Viewing and Clearing the Bluetooth Device Information

Procedure:

1. < or > to `BT`. Press the **Menu Select** button directly below `BT` to access the Bluetooth feature screen.
2. ︿ or ﹀ to `Devices`.

   Once the display highlights the `Devices`, the display shows `XX connected` alternates with `XX paired`.

3. Press the **Menu Select** button directly below `Sel`.
4. If there are devices being paired or connected, ︿ or ﹀ along the list of `<Device Friendly Name>` to see the status of each device.

   If there are no active Bluetooth devices being paired or connected, the display shows `No devices`.
5. Perform one of the following actions:

   - To clear the device from the list, ︿ or ﹀ to the required device, press the **Menu Select** button directly below `Clr`.
   - To exit from this function, press the **Menu Select** button directly below `Back` to return to the previous screen without deleting the device name.

   If `Clr` is selected, the display shows `<Device Friendly Name> clear?`.
6. Press the **Menu Select** button directly below `Yes` or `No` to proceed delete the device or to exit this function and return to previous screen.

Result: If the device is deleted successfully, the display shows `<Device Friendly Name> cleared` to indicate clearing is successful.

If the device is not deleted successfully, you hear the radio sounds a short, low-pitched tone. The display shows `<Device Friendly Name> clear failed`. The display returns to previous screen.

Postrequisites:

NOTE: If Re-Pair Timer is set to infinite and you clear keys on the radio, you must clear keys on all previously paired devices as well. (Please see your *Accessories manual* for further details.)

7.25.4
Editing the Bluetooth Friendly Name

Prerequisites: Your radio must be preprogrammed to allow you to use this feature.

Procedure:

1. < or > to `BT`. Press the **Menu Select** button directly below `BT` to access the Bluetooth feature screen.
2. ︿ or ﹀ to `Friendly name` and press the **Menu Select** button directly below `Edit`.

   A blinking cursor appears in the `Friendly Name` screen.
3. Use the **keypad** to edit the text.
4. Perform one of the following actions:

   - Press the **Menu Select** button directly below `Ok` to save the new Friendly Name and return to the Bluetooth feature screen.

7.25.5
Responder Alert Sensors

Responder alert sensors allow the radio to send an over-the-air (OTA) notification when the radio receives the holster sensor event.

To enable the feature, ensure that the Global Positioning System (GPS), Enhanced Data, and Bluetooth feature of your radio is turned on and the radio supports Bluetooth Low Energy (BTLE).

You can disable the feature temporarily or permanently. This feature allows you to prevent one or all events from being reported OTA.

This feature is enabled through Customer Programming Software (CPS) configuration. For more information, contact your system administrator.

7.25.5.1
Holster Sensor

Holster sensor monitors the state of the holster and allows the radio to send an Over-The-Air (OTA) notification whenever a gun or a taser is pulled out of the holster or put in the holster.

7.25.5.2
Low Battery Notification

When the holster or weapon fire sensor battery is below the preset threshold value, the radio displays `<BT alias> low batt` and a tone sounds.

7.25.5.3
Disabling the Sensor

This feature disables the sensors temporarily or permanently from sending the sensor events to the system.

NOTE: The feature is only applicable to holster sensor and weapon fired sensor. Vest pierced sensor cannot be disabled.

7.25.5.3.1
Disabling the Sensor Temporarily

Procedure:

Short-press the preprogrammed **Sensor** button or the preprogrammed **Menu Select** button to activate the sensor timer.

The following scenarios affect the sensor state:

- If a gun or taser is removed from the holster within the timer duration, the timer stops and switches the sensor to disabled state. A tone sounds and the radio displays `Sensor Disable`.

  NOTE: The radio enables the sensor only when all the guns or tasers are placed into the holster. A tone sounds and the radio displays `Sensor On` temporarily.
- If the timer expires without an event, a tone sounds, the radio switches the sensor to enabled state, and clears the sensor status from the display.
- If the preprogrammed **Sensor** button or the preprogrammed **Menu Select** button is long-pressed, the over-the-air (OTA) sensor notification is enabled.

7.25.5.3.2
Disabling the Sensor Permanently

Procedure:

1. Long-press the preprogrammed **Sensor** button or the preprogrammed **Menu Select** button to permanently disable the sensors.

   A tone sounds and the radio displays `Sensor Off`. While in this state, no events is reported over-the-air (OTA), regardless of how many times the gun is drawn, re-inserted or weapon is fired.

The radio generates a bad key tone if the sensor is not allowed to be disabled or there is no sensor connected to the radio when the preprogrammed button or menu select button is pressed.

2. Long-press the preprogrammed **Sensor** button or the preprogrammed **Menu Select** button again to enable the OTA Sensor notification.

   A tone sounds, and the radio displays `Sensor On`.

7.26

ASTRO 25 (P25) Programming Over Project 25 (POP25)

Also called Over-the-Air Programming, this feature allows configuration data and firmware to be upgraded to your radio over-the-air. Full use of the radio is retained during the data transfer without interrupting communication.

If the upgrade happens on the ASTRO 25 and ASTRO Conventional systems, the upgrade pauses to give priorities to voice call, and continues after the voice call ended. If the upgrade happens on a Wi-Fi network, the upgrade process runs concurrently with voice calls.

Once a configuration upgrade is downloaded to your radio, you can install new changes immediately, or delay changes to be installed on the radio when it is being powered up.

Your radio can also be configured to allow you to accept or reject an upgrade.

7.26.1

Responding to the Notification of Upgrade

Procedure:

1. The display shows `Upgrade?` and two short, medium- pitched tones sound every 30 seconds until the user makes a choice of either accepting, delaying, or rejecting the request.

   NOTE: Do not remove the power cable or power down the radio during the firmware upgrade process.

2. Perform one of the following actions:
   - Press the **Menu Select** button below `Acpt` to accept the request to upgrade immediately.
   - Press the **Menu Select** button below `Dlay` to delay the request to upgrade.
   - Press the **Menu Select** button below `Rej` to reject the request to upgrade.

Result: One of the following scenarios occurs:

- If you choose to accept, the display shows `Programming Dont power off` to indicate that the upgrade is about to begin. The radio resets to install the upgrade. In the case of configuration data upgrade, the process only takes a few seconds. In the case of firmware upgrade, the installation takes several minutes.

  NOTE: The radio cannot be used while the upgrade is being installed. Therefore, make sure to only accept the upgrade at a convenient time when immediate radio use is not required.

- If you choose to delay, a configuration data upgrade is installed automatically at the next power up. However, in the case of a firmware upgrade, the radio prompts `Upgrade?` again at the next power up.
- If you choose to reject, the display shows `Upg Aborted`. The radio continues to function with the current configuration until it gets reprogrammed.

NOTE: If your radio has problems upgrading over-the-air, consult a qualified technician for details.

7.27
Voice Announcement

This feature enables the radio to audibly indicate the current feature mode, zone, or channel assigned to the user.

The available voice announcement (VA) priority options are:

High
Voice announcement is enabled even when the radio is receiving calls.

Low
Voice announcement is disabled when the radio is receiving calls.

NOTE: If the **Voice Announcement** field is set to **Enabled**, after an interruption by a momentary tone one of the following scenarios occurs:

- If **Suppress Replay** field is **Enabled**, voice announcement replays.
- If **Suppress Replay** field is **Disabled**, voice announcement turns off.

7.28
Site Selectable Alerts (ASTRO 25 Trunking)

A Site Selectable Alert (SSA) is an Intelligent Lighting indicator with audio alert. The alert is sent to radios at sites to notify the users when special situations occur.

Your radio supports up to 250 site aliases. Only authorized radios are enabled to send SSA.

NOTE:
The alert alias, alert tone, and alert period are configured in the Customer Programming Software (CPS). For more information, contact your system administrator.

The SSA alert volume is reduced when voice audio is received at the same time. It is important that the SSA audio file is created with clear loud audio to ensure audio clarity at reduced levels.

7.28.1
Sending SSA Notification to Single Site

Procedure:

1. < or > to `SSA`.
2. Press the **Menu Select** button directly below `SSA`.

   The display shows the **Site Alert** screen.
3. ︿ or ﹀ to `Start Alert` and press the **Menu Select** button directly below `Sel`.

   The display shows the **Select Site** screen.
4. ︿ or ﹀ to the desired Site Alias. Press the **Menu Select** button directly below `Sel`.

   The display shows the **Select Alert** screen.
5. ︿ or ﹀ to select the desired Alert Alias and press the **Menu Select** button directly below `Send`.

   The display shows `Sending req`.

   If radio is out of range, roaming to a foreign system or in a failsoft situation, the display shows `Req failed`.

   If the request is successful, the display shows `Req successful`.

If the site is not available, the display shows `<Site Alias> not available`.

If the site does not exist, the display shows `<Site Alias> does not exist`.

6. To return to the Home screen, press the **Menu Select** button directly below `Exit`.

Result: If you are at the site designated to receive this alert, you can hear an alert tone repeated periodically. The display shows the `<Alert Alias>` with the intelligent lighting at Home screen.

7.28.2

Sending SSA Notification to Single Site by Manual Entry

Procedure:

1. < or > to `SSA`.
2. Press the **Menu Select** button directly below `SSA`.

   The display shows the **Site Alert** screen.

3. ︿ or ﹀ to `Start Alert` and press the **Menu Select** button directly below `Sel`.

   The display shows the **Select Site** screen.

4. ︿ or ﹀ to `[SiteID Entry]` to send alert through the manual entry. Press the **Menu Select** button directly below `Edit`.

   The display shows the **Enter SiteID** screen.

5. Key in the desired Site ID and press the **Menu Select** button directly below `Ok`.

   If a correct Site ID is entered, the display shows the **Select Alert** screen.
   If a wrong Site ID is entered, the display shows `Invalid ID` and prompts to enter the Site ID again.

6. ︿ or ﹀ to select the desired Alert Alias and press the **Menu Select** button directly below `Send`.

   The display shows `Sending req`.
   If radio is out of range, roaming to a foreign system or in a failsoft situation, the display shows `Req failed`.

   If the request is successful, the display shows `Req successful`.

   If the site is not available, the display shows `<Site ID> not available`.

   If the site does not exist, the display shows `<Site ID>does not exist`.

7. To return to the Home screen, press the **Menu Select** button directly below `Exit`.

Result: If you are at the site designated to receive this alert, you can hear an alert tone repeated periodically. The display shows the `<Alert Alias>` with the intelligent lighting at Home screen.

7.28.3

Sending SSA Notification to All Sites

Procedure:

1. < or > to `SSA`.
2. Press the **Menu Select** button directly below `SSA`.

   The display shows the **Site Alert** screen.

3. ⌃ or ⌄ to `Start Alert` and press the **Menu Select** button directly below `Sel`.

   The display shows the **Select Site** screen.

4. ⌃ or ⌄ to `[All Sites]` and press the **Menu Select** button directly below `Sel`.

   The display shows the **Select Alert** screen.

5. ⌃ or ⌄ to select the desired `<Alert Alias>` and press the **Menu Select** button directly below `Send`.

   The display shows `Sending req`.
   If radio is out of range, roaming to a foreign system or in a failsoft situation, the display shows `Req failed`.

   If the request is successful, the display shows `Req successful`.

   If one or more sites are not available, the display shows `Not all sites available`. Repeat step 3.

6. To return to the Home screen, press the **Menu Select** button directly below `Exit`.

Result: If you are at the site designated to receive this alert, you can hear an alert tone repeated periodically. The display shows the `<Alert Alias>` with the intelligent lighting at Home screen.

7.28.4
Sending SSA Notification to All Available Sites

Procedure:

1. < or > to `SSA`.
2. Press the **Menu Select** button directly below `SSA`.

   The display shows the **Site Alert** screen.

3. ⌃ or ⌄ to `Start Alert` and press the **Menu Select** button directly below `Sel`.

   The display shows the **Select Site** screen.

4. ⌃ or ⌄ to `[All Avail]` and press the **Menu Select** button directly below `Sel`.

   The display shows the **Select Alert** screen.

5. ⌃ or ⌄ to select the desired Alert Alias and press the **Menu Select** button directly below `Send`.

   The display shows `Sending req`.
   If radio is out of range, roaming to a foreign system or in a failsoft situation, the display shows `Req failed`.

   If the request is successful, the display shows `Req successful`.

6. To return to the Home screen, press the **Menu Select** button directly below `Exit`.

Result: If you are at the site designated to receive this alert, you can hear an alert tone repeated periodically. The display shows the `<Alert Alias>` with the intelligent lighting at Home screen.

7.28.5

Stopping SSA Notification of a Single Site

Procedure:

1. < or > to `SSA`.
2. Press the **Menu Select** button directly below `SSA`.

   The display shows the **Site Alert** screen.
3. ︿ or ﹀ to `Stop Alert` and press the **Menu Select** button directly below `Sel`.

   The display shows the **Select Site** screen.
4. ︿ or ﹀ to select the desired Site Alias and press the **Menu Select** button directly below `Send`.

   The display shows `Sending req`.

   If radio is out of range, roaming to a foreign system or in a failsoft situation, the display shows `Req failed`.

   If the request is successful, the display shows `Req successful`.

   If the site is not available, the display shows `<Site Alias> not available`.

   If the site does not exist, the display shows `<Site Alias>does not exist`.
5. To return to the Home screen, press the **Menu Select** button directly below `Exit`.

Result: The SSA Alert for the designated site stops.

7.28.6

Stopping SSA Notification of a Single Site by Manual Entry

Procedure:

1. < or > to `SSA`.
2. Press the **Menu Select** button directly below `SSA`.

   The display shows the **Site Alert** screen.
3. ︿ or ﹀ to `Stop Alert` and press the **Menu Select** button directly below `Sel`.

   The display shows the **Select Site** screen.
4. ︿ or ﹀ to `[SiteID Entry]` and press the **Menu Select** button directly below `Edit`.

   The display shows the **Enter SiteID** screen.
5. Key in the required Site ID and press the **Menu Select** button directly below `Send`.

   One of the following scenarios occur:

   - If a wrong Site ID is entered, the display shows `Invalid ID` and prompts to enter the Site ID again.
   - If a correct Site ID is entered, the display shows `Sending req`.
   - If the request is successful, the display shows `Req successful`.
   - If the single site is not available, the display shows `<Site ID> not available`.
   - If the single site does not exist, the display shows `<Site ID> does not exist`.

6. To return to the Home screen, press the **Menu Select** button directly below `Exit`.

Result: The SSA Alert for the designated site stops.

7.28.7

Stopping SSA Notification of All Sites

Procedure:

1. < or > to `SSA`.
2. Press the **Menu Select** button directly below `SSA`.

   The display shows the **Site Alert** screen.
3. ︿ or ﹀ to `Stop Alert` and press the **Menu Select** button directly below `Sel`.

   The display shows the **Select Site** screen.
4. ︿ or ﹀ to `[All Sites]` and press the **Menu Select** button directly below `Send`.

   The display shows `Sending req`.
   If radio is out of range, roaming to a foreign system or in a failsoft situation, the display shows `Req failed`.

   If the request is successful, the display shows `Req successful`.

   If one or more sites are not available, the display shows `Not all sites available`. Repeat step 3.
5. To return to the Home screen, press the **Menu Select** button directly below `Exit`.

Result: The SSA Alert for all sites stop.

7.28.8

Stopping SSA Notification of All Available Sites

Procedure:

1. < or > to `SSA`.
2. Press the **Menu Select** button directly below `SSA`.

   The display shows the **Site Alert** screen.
3. ︿ or ﹀ to `Stop Alert` and press the **Menu Select** button directly below `Sel`.

   The display shows the **Select Site** screen.
4. ︿ or ﹀ to `[All Avail]` and press the **Menu Select** button directly below `Send`.

   The display shows `Sending req`.
   If radio is out of range, roaming to a foreign system or in a failsoft situation, the display shows `Req failed`.

   If the request is successful, the display shows `Req successful`.
5. To return to the Home screen, press the **Menu Select** button directly below `Exit`.

Result: The SSA Alert for all available sites stop.

7.29 Utilities

This chapter explains the operations of the utility functions available in your radio.

7.29.1 Selecting the Power Level

This feature enables you to select the power level at which your radio transmits. The radio always turns on to the default setting. These reduced transmit power level settings do not affect the receiving performance of your radio, nor diminish the overall quality of the audio and data functionality of the radio given the following conditions.
Power level `Low` enables a shorter transmitting distance to conserve power. Power level `High` enables a longer transmitting distance.

Power level `Medium Low` is used when communicating in close proximity, but more power is required than the Low Power setting provides.

Power level `Medium High` is used when a stronger signal is needed to extend transmission distances, but the High Power setting is too much.

Prerequisites: This feature must be preprogrammed by a qualified radio technician.

Procedure:

1. Selecting the Power Level using the **Transmit Power Level** switch:
   a. Use the preprogrammed **Transmit Power Level** switch to toggle the power level between low and high power.
2. Selecting the Power Level using the radio menu:
   a. < or > to `Pwr`.
   b. Press the **Menu Select** button directly below `Pwr`.

Result:
The display shows `Low power` and the low power icon or the display shows `High power` and the high power icon.

7.29.2 Selecting a Radio Profile

When and where to use: This feature allows you to manually switch the visual and audio settings of the radio. The display, backlight, alert tones, and audio settings are defined according to the preprogrammed radio settings of each radio profile.
Refer to a qualified technician for more information.

Do one of the following to select a radio profile. You can use the options interchangeably depending on your preference and the programmed functions.

Procedure:

- Selecting a radio profile using the preprogrammed **Profile** button:
  a. Press the preprogrammed **Profile** button.
  b. ︿ or ﹀ to scroll through the menu selections.

c. Press the **Menu Select** button directly below `Sel` to select the required radio profile, or press the **Menu Select** button directly below `Exit` to exit the screen without making any changes.

The radio returns to the Home screen. The profile name on the Home screen indicates the current selected radio profile.

- Selecting a radio profile using the radio menu:

  a. < or > to `Prfl` and press the **Menu Select** button directly below `Prfl` to access the `Profiles` feature screen.

  b. ︿ or ﹀ to scroll through the menu selections.

  c. Press the **Menu Select** button directly below `Sel` to select the required radio profile, or press the **Menu Select** button directly below `Exit` to exit the screen without making any changes.

  The radio returns to the Home screen. The profile name on the Home screen indicates the current selected radio profile.

7.29.3
Enabling and Disabling the Radio Alias

This feature allows you to display or hide the radio alias (name).

Procedure:

Press the **MyID** menu item.

Result: The display shows momentary `Radio ID off`, and the radio alias disappears from the Home screen or the display shows momentary `Radio ID on`, and the radio alias appears on the Home screen.

7.29.4
Selecting the Audio Speaker

Prerequisites: Your radio must be preprogrammed to allow you to use this feature.
When and where to use: This feature allows you to select the speaker route for the radio's audio from either the main or the secondary speaker using the radio profile settings. While both speakers function together with the secondary speaker enhancing intelligibility of the received audio during typical radio operation, each speaker has an independently-tuned frequency response and volume level operation.
The secondary speaker also has a "whisper" mode with a modified volume taper for quieter modes of operation.

NOTE: If an external speaker or microphone accessory is attached to the radio, neither internal speaker is operational as audio is routed to the accessory.

Do one of the following to select the audio speaker. You can use the options interchangeably depending on your preference and the programmed functions.

Procedure:

- Select the audio speaker using the preprogrammed **Profile** button:

  a. Press the preprogrammed **Profile** button.

  b. ︿ or ﹀ to scroll through the menu selections.

c. Press the **Menu Select** button directly below `Sel` to select the radio profile with the required speaker routing or press the **Menu Select** button directly below `Exit` to exit the screen without making any changes.

   The radio returns to the Home screen. The profile name on the Home screen indicates the current selected radio profile.

- Select the audio speaker using the radio menu `Prfl`:

  a. < or > to `Prfl`.

  b. To access the `Profiles` feature screen, press the **Menu Select** button directly below `Prfl`.

  c. ︿ or ﹀ to scroll through the menu selections.

  d. Press the **Menu Select** button directly below `Sel` to select the radio profile with the required speaker routing or press the **Menu Select** button directly below `Exit` to exit the screen without making any changes.

     The radio returns to the Home screen. The profile name on the Home screen indicates the current selected radio profile.

7.29.5

Controlling the Display Backlight

You can enable or disable the radio display backlight as needed, if poor light conditions make the display or keypad difficult to read.

You can also maintain a minimum backlight level on the radio front display, depending on how your radio is programmed.

NOTE: The backlight setting also affects the **Menu Select** buttons backlighting accordingly.The backlight setting also affects the **Menu Select** buttons and **Navigation** button backlighting accordingly.The backlight setting also affects the **Menu Select** buttons, the **Navigation** button, and the **keypad** backlighting accordingly.

The backlight remains on for a programmed time before it automatically turns off completely or returns to the minimum backlight level.

Procedure:

Perform one of the following actions:

- To turn the backlight on, press any key of the keypad, the **Menu Select** or **Navigation** button, or any programmable radio controls or buttons.To turn the backlight on, press either the **Menu Select** buttons or any programmable radio controls or buttons.

7.29.6

Locking and Unlocking the Keypad and Controls

You can lock your radio keypad, programmable buttons, and knob or knobs to avoid inadvertent entry.

Check with your dealer or qualified technician for best selection to suit your usage.

Procedure:

1. Toggle the preprogrammed **Keypad/Control Lock** button to on.

   The display shows `Kypd/Ctrl Lock`.

2. Toggle again to unlock the controls.

7.29.7

Turning the Controls and Keypad Buttons Tones On or Off

When and where to use: You can enable and disable the tones of Navigation buttons, controls and keypad if needed.

Procedure:

- Turning the tones on or off using the preprogrammed **Mute** button:
  a. To turn the tones off or on, press the preprogrammed **Mute** button.
- Turning the tones on or off using the radio menu:
  a. < or > to `Mute`.
  b. Press the **Menu Select** button directly below `Mute`.

     The display shows momentary `Tones off`, indicating that the tones are disabled or the display shows momentary `Tones on`, and you hear a short tone indicating that the tones are enabled.

7.29.8

Turning Voice Mute On or Off

This feature allows you to mute the voice transmission of the current zone and channel.

When and where to use:
Do one of the following to turn Voice Mute on or off. You can use the options interchangeably depending on your preference and the programmed functions.

Procedure:

- Turning Voice Mute off or on using the preprogrammed **Voice Mute** button:
  a. To turn the feature off or on, press the preprogrammed **Voice Mute** button.
- Turning Voice Mute on or off using the radio menu:
  a. < or > to `VMut`.
  b. Press the **Menu Select** button directly below `VMut`.

Result: The display shows `Voice mute off`, and you hear a short tone, indicating that the feature is disabled or the display shows `Voice mute on`, and you hear a short tone, indicating that the feature is enabled.

7.29.9

Using the Time-Out Timer

When and where to use: This feature turns off the transmitter of your radio. You cannot transmit longer than the preset timer setting.

If you attempt to do so, the radio automatically stops your transmission, and you hear a talk-prohibit tone.

The timer is defaulted at 60 seconds, but it can be preprogrammed from 15 to 465 seconds, in 15-second intervals, or it can be disabled entirely for each radio mode, by a qualified radio technician.

NOTE: You hear a brief, low-pitched, warning tone four seconds before the transmission times out.

Procedure:

1. Hold down the **PTT** button longer than the preprogrammed time.

   You hear a continuous talk prohibit tone. The transmission is cut off and the LED goes out.

2. Release the **PTT** button.

   The timer resets.

3. To re-transmit, press the **PTT** button.

   The time-out timer restarts and the LED lights up solid red.

7.29.10 Time and Date Setup

The time setting is a 12-hour clock. The display shows `12:00AM`. The default setting for the domestic date shows `MDY`.

For more information, contact your system administrator.

7.29.10.1 Editing the Time and Date

Procedure:

1. < or > to `Clck`.
2. Press the **Menu Select** button directly below `Clck`.

   The display shows the current setting of the radio.

3. Press the **Menu Select** button directly below `Edit`.

   The first item blinks.

4. Perform one of the following actions:
   - ︿ or ﹀ to change the selected item.
   - < or > one or more times to move to an item you wish to change. ︿ or ﹀ to change the selected item.
   - Press the **Menu Select** button directly below `Exit` to exit the screen without making any changes and return to the Home screen.
5. Perform one of the following actions:
   - Press the **Menu Select** button directly below `Ok` once you have finished to save your changes and return to the Home screen.
   - Press the **Menu Select** button directly below `Cncl` to discard all changes and return to the Home screen.

Press at any time to return to the Home screen without saving your changes.

NOTE: If a call arrives while the radio is in the clock-setting menu, the radio exits clock setting and displays the call information. Any changes made before the call is **not** saved.

7.29.11

Adjusting the Squelch Level

The Adjustable Fine Tune Squelch feature allows you to adjust the desired squelch level of the radio between level 0 and 15.

The following settings determine the types of call that you receive:

- 0 – Squelch is open and all calls regardless of signal strength and background noise pass through.
- Lower setting – Calls with low signal strength and higher than normal background noise pass through.
- Higher Setting – Calls with low signal strength and higher than normal background noise are filtered out.

Procedure:

1. From the Home screen, press and hold the preprogrammed **Private Line Disable** button.

   The radio displays the **Squelch** menu.

2. To adjust the squelch level, perform one of the following actions:
   - Press **-** or **+**.
   - Press the **Left** or **Right** navigation button.
3. To return to the Home screen, press the **Home** button.

7.29.12

Conventional Squelch Operation

This feature filters out unwanted calls with low signal strength or channels that have a higher than normal background noise.

Analog Options

Tone Private Line, Digital Private-Line, and carrier squelch is available and programmed per channel.

Option	Result
Carrier squelch	You hear all traffic on a channel.
Tone Private Line or Digital Private-Line	The radio responds only to your messages.

Digital Options

One or more of the following options can be programmed in your radio. For more information, contact your system administrator.

Option	Result
Digital Carrier-Operated Squelch	You hear all digital traffic.
Normal Squelch	You hear any digital traffic having the correct network access code.

Option	Result
Selective Switch	You hear any digital traffic having the correct network access code and correct talkgroup.

7.29.12.1
Using Conventional Squelch Operation Features

Procedure:

1. < or > to `Sql`.
2. Press the **Menu Select** button directly below `Sql`.

   The display shows `Squelch XX`, where `XX` is the value for the current squelch.
3. Perform one of the following actions:
   - Press the **Menu Select** button directly below "+" to increase the squelch volume.
   - Press the **Menu Select** button directly below "-" to decrease the squelch volume.
4. Press ⌂ to return to the selected channel.

7.29.13
Using the PL Defeat Feature

This feature allows you to override any coded squelch programmed to a channel. Your radio also unmutes any digital activity on a digital channel. When this feature is active, the Carrier Squelch status indicator is displayed.

Procedure:

Place the programmed **PL Defeat** switch in the PL Defeat position.

One of the following indications occurs :

- Your radio plays the active transmission on the channel.
- If no activity is present, your radio is muted.

7.29.14
Digital PTT ID Support

This feature allows you to see the radio ID (number) of the radio from whom you are currently receiving a transmission. The receiving radio and the dispatcher can view the ID, which consists of up to a maximum of eight characters.

The ID number of your radio is also automatically sent every time you press the **PTT** button. This feature is programmed per channel. For digital voice transmissions, the ID of your radio is sent continuously during the voice message.

7.29.15
Smart PTT (Conventional Only)

Smart PTT is a per-personality, programmable feature used to keep radio users from talking over other radio conversations. When Smart PTT is enabled in your radio, you cannot transmit on an active channel.

The following table shows the variations of Smart PTT.

Mode	Description
Transmit Inhibit on Busy Channel with Carrier	You cannot transmit if traffic is detected on the channel.
Transmit Inhibit on Busy Channel with Wrong Squelch Code	You cannot transmit on an active channel with a squelch code or (if secure-equipped) encryption key other than your own. If the PL code is the same as yours, the transmission is not prevented.
Quick-Key Override	Your radio must be programmed to allow you to use Quick-Key Override. This feature works with either one of the two above variations. You can override the transmit-inhibit state by quick-keying the radio (press **PTT** button twice within the programmed time limit).

7.29.16

Transmit Inhibit

The Transmit Inhibit feature allows you to stop all transmission including voice and data. The radio can receive messages but is not able to reply the acknowledgment request of the received message.

This feature is available for APCO 25 Trunking, Type II Trunking, and Conventional operations for all APX radios.

You can physically control the transmission of the radio especially during operation in hazardous environments. An environment is considered hazardous if radio transmission could initiate an explosion or other dangerous reactions.

7.29.16.1

Enabling Transmit Inhibition

Procedure:

Perform one of the following actions:

- Switch the preprogrammed Transmit Inhibit switch to Transmit Inhibit enabled.
- < or > to `TxIn`. Press the **Menu Select** button below `TxIn`.
- Press the **Transmit Inhibit** programmable button.

NOTE: If the user has disabled TX Inhibit using the menu and then moves the switch to the position where TX Inhibit is enabled, the new value overwrites the menu value.

The display shows `Tx inhibit on`. You hear a sequence of short, low-high tones to indicate that transmission is inhibited.

Result: Pressing **PTT** triggers the radio sounds a constant short, low-pitched tone (reject tone).

NOTE: The status of the Transmit Inhibit does not change after the radio powers up.

7.29.16.2
Disabling Transmit Inhibition

Procedure:

Perform one of the following actions:

- < or > to `TxIn`. Press the **Menu Select** button below `TxIn`.
- Press the Transmit Inhibit programmable button.

NOTE: If the user has disabled TX Inhibit using the softkey and then moves the switch to the position where TX Inhibit is enabled, the new value overwrites the menu value.

The display shows `Tx inhibit off`. You hear a sequence of short, high-low tone (Transmit Inhibit Off tone) to indicate that the transmission is back to normal operation.

7.29.17
General Radio Information

This feature only supports Model 3.5 and Model 2.5.

Use this menu item to view the general information of your radio.

The available information is:

- Radio Information
- IP Display
- Control Assignments
- Soft ID (if enabled)

7.29.17.1
Accessing the Radio Information

When and where to use: This feature displays the following radio information:

- Host Version
- Secure Version
- Model Number
- ESN
- Flash Code
- Tuning Version
- Option Board Type (optional)
- Option Board Bluetooth Address (optional)
- Expansion Board Type (optional)
- MFK Secondary Function
- DSP Version
- KG (Secure Algorithm)
- Serial Number
- Flash Size and Type
- RF Band(s)

- Processor Version
- Option Board Serial Number (optional)
- Option Board Software Version (optional)
- Language Pack ID and Version (only when the language of the display is set to non-English)
- Codeplug Alias (Optional)

NOTE: To return to the Home screen, press at any time.

Procedure:

1. Perform one of the following actions:
   - Press the preprogrammed `Info` button.
   - < or > to `Info` and press the **Menu Select** button directly below `Info`.
2. ︿ or ﹀ to `Radio Info` and press the **Menu Select** button directly below `Sel`.
   The display shows the Information screen.
3. Perform one of the following actions:
   - ︿ or ﹀ to scroll through the various information.
   - To return to the previous screen, press the **Menu Select** button directly below `Back`.
   - Press to return to the Home screen .

7.29.17.2

Viewing the IP Information

When and where to use:
This feature displays the device name, IP address, and status of your radio.

NOTE: The device name of your radio is preprogrammed. Check with your dealer or system administrator for more information.

Procedure:

1. Perform one of the following actions:
   - Press the preprogrammed **Info** button.
   - < or > to `Info` and press the **Menu Select** button directly below `Info`.
2. ︿ or ﹀ to `IP Info` and press the **Menu Select** button directly below `Sel`.
   The display shows the IP Info screen.
3. Perform one of the following actions:
   - ︿ or ﹀ to scroll through the various information.
   - Press the **Menu Select** button directly below `Back` to return to the previous screen.
   - Press to return to the Home screen.

7.29.17.3
Viewing the Control Assignments

When and where to use: This feature displays the programmable radio functions assigned to the controls of your radio for the currently selected channel.

See Programmable Features on page 27 for more information on the various programmable features of your radio.

Procedure:

1. Perform one of the following actions:
   - Press the preprogrammed `Info` button.
   - < or > to `Info` and press the **Menu Select** button directly below `Info`.
2. ︿ or ﹀ to `Control map` and press the **Menu Select** button directly below `Sel`.

   The display shows the Control Map screen.
3. Perform one of the following actions:
   - ︿ or ﹀ to scroll through the various information.
   - Press the **Menu Select** button directly below `Back` to return to the previous screen.
   - Press ⌂ to return to the Home screen.

7.29.17.4
Editing the Soft ID

Prerequisites: Your radio must be preprogrammed to allow you to use this feature.
When and where to use: This feature allows you to change your username.

Procedure:

1. Perform one of the following actions:
   - Press the preprogrammed **Info** button.
   - < or > to `Info` and press the **Menu Select** button directly below `Info`.
2. ︿ or ﹀ to Soft ID and press the **Menu Select** button directly below `Sel`.

   The display shows the current Soft ID.
3. Perform one of the following actions:
   - Press the **Menu Select** button directly below `Edit` to edit the current Soft ID.
   - Press the **Menu Select** button directly below `Back` to return to the previous screen.

   A blinking cursor appears in the Edit Soft ID screen.
4. Use the keypad to edit the text.
5. Perform one of the following actions:
   - Press the **Menu Select** button directly below `Ok` to save the new Soft ID and return to the previous screen.
   - Press the **Menu Select** button directly below `Cncl` to return to the previous screen.

7.29.18

Front Panel Programming

You are able to customize certain feature parameters in Front Panel Programming (FPP) to enhance the use of your radio.

The radio can be programmed in two ways:

- Front Panel Programming (FPP) using the front panel controls of the radio.
- Customer Programming Software (CPS), with the radio connected to a PC computer.

There are two methods to program a channel within a zone. Either:

- Select the zone and channel through the radio interface, and then initiate the FPP feature. Or,
- Initiate the FPP feature, and then select the zone and channel.

NOTE: When any of the Rx parameters such as Rx frequency, Rx PL, Rx DPL, and Rx NAC is changed, FPP automatically copies these Rx parameter values to the equivalent Direct operation (also known as Talkaround operation) parameters. If you use FPP to change the Rx frequency to be the same as the Tx frequency and subsequently use the CPS to read then write to the radio, Direct/Talkaround mode will operate differently from when a receive channel parameter value is changed through FPP. Refer to the CPS help files for a description of Direct/ Talkaround Mode operation, in respect to a CPS write to the radio.

7.29.18.1

Initiating the FPP Feature

Prerequisites: Before using this feature, you should:

- Familiarize yourself with the your radio.
- Remove the universal connector seal or any other accessories if it is attached to the radio.

Procedure:

1. Press < or > to `FPP`.
2. Press the **Menu Select** button directly below `FPP`.
   - If you are going to program zones which are not password protected (only supported in Federal FPP), go to step 4.
   - If you are going to program a set of zones, of which one or more are password protected, go to step 3. The radio displays `Password`.
3. Key in the password.

   The radio displays `Password: ********`.
4. Press **OK**.

   The radio displays `Radio Param` and `Zn/Ch Param`.

7.29.18.2

Changing Password (Optional)

Radios from the Motorola Solutions factory are provisioned with a blank password.

Prerequisites: To access the protected channels, press **OK** when the `Enter Old Password` prompts you to change the password.

Procedure:

1. Press **EDIT**.
2. Enter the outdated password.
3. Enter the new password.
4. To accept the entry, enter the new password again.

7.29.18.3
Selecting a Channel within a Zone

Procedure:

1. Press < or > to `FPP` and press the **Menu Select** button directly below `FPP`.
   The radio displays the `Enter password` screen
2. Enter the password and press the **Menu Select** button directly below `Ok`.
3. Press ︿ or ﹀ to select `Zn/Ch`.
4. Press ︿ or ﹀ to select the required zone and press **SEL** to view the channels.
5. Press ︿ or ﹀ to select the required channel and press **SEL** to access the channel parameter.
   The radio displays the channel parameter screen.
6. Press ︿ or ﹀ to select the required channel parameter.

7.29.18.4
Changing a Channel Parameter

Procedure:

1. Press < or > to `FPP` and press the **Menu Select** button directly below `FPP`.
   The radio displays the `Enter password` screen
2. Enter the password and press the **Menu Select** button directly below `Ok`.
3. ︿ or ﹀ to scroll through the various information.
4. Press **EDIT** to edit the channel parameter.
5. Change the parameter value.
6. Press **OK** to accept the parameter change and return to view mode.
7. Perform one of the following actions and proceed to the next step:
   - ︿ or ﹀ to select other channel parameters.
   - Press **BACK** to access a different channel and make any necessary programming changes.
8. Press **BACK** to return to **Zone List Selector**.
9. Press **BACK** to return to **FPP** main menu.
10. Press 🏠 to return to the Home screen.

7.29.18.5

Editing Parameters

When and where to use: Use the keypad to enter the numeric digits. Each key can generate different characters of the alphabet through multiple presses of the same key. For all parameters except **Chan Name**, **Zone Name**, **Top Chan Name** and **Top Zone Name** the < or > buttons increment or decrement the selected value by scrolling through the valid entries.

Procedure:

Perform the following actions based on the type of the parameter:

Table 8: Parameter Editing Keys

Parameter	Editing Keys	Value
Tx Rx	Perform one of the following: • < or > to increment entry and to move cursor. • Use keypad to directly enter the desired value.	
Tx PL Rx PL Tx DPL Rx DPL	Perform one of the following: • < or > to increment entry and to move cursor. • Use keypad to directly enter the desired value. **DEL** to delete the parameter value of PL entered. In addition, for **Tx DPL** and **Rx DPL**, the **INVT** softkey switches **INVERT** on and off.	
Tx NAC Rx NAC	< or > to increment or decrement entry and to move cursor within parameter value. Use keypad to enter hexadecimal numbers: • Plus, multiple press 2 to scroll through A, B, C, 2. • Plus, multiple press 3 to scroll through D, E, F, 3.	
Rx Type	Perform one of the following: • ︿ or ﹀ to toggle between valid entries. • Press the keypad digits for quick access to locations in the list.	ANALOG/ DIGITAL/ MIXED
Tx Type		ANALOG/ DIGITAL
Bandwidth		25kHz/ 20kHz/ 12.5kHz
Protect		ON/OFF
Tx Deviation		5.0 kHz/4.0 kHz/2.5 kHz
Power Level		High/Low
Hot Keypad		ON/OFF
Busy LED		ON/OFF
Low Batt LED		ON/OFF
MPL Enable		Disabled/Rx/ Tx/All

Parameter	Editing Keys	Value
Scan List		None/Scan List 1, 2, 3,...
Zone Name Top Chan Name Top Zone Name Chan Name	Use keypad to enter numbers and alphabet characters. For more information, see Text Entry Icons on page 25.	

NOTE:
To edit **Tx PL**, **Rx PL**, **Tx DPL**, and **Rx DPL**, the PL Setting must be set to **Disabled**.

If PL setting is set to **ALL**, **Rx** or **Tx**, there is no **Edit** selection available to change the codes for **Tx PL**, **Rx PL**, **Tx DPL**, or **Rx DPL**.

If PL setting is set to **Rx**, you can only edit **Tx PL** and **Tx DPL** codes.

If PL setting is set to **Tx**, you can only edit **Rx PL** and **Rx DPL** codes.

Chapter 8

Accessories

Not all accessories are FCC certified to operate with all radio models, band splits, or both. See the radio price pages for a list of FCC certified accessories or contact your sales representative for accessory compatibility.

See https://www.motorolasolutions.com to know more about the accessories supported by this radio.

Legal and Compliance Statements

Disclaimer

The information in this document is carefully examined, and is believed to be entirely reliable. However, no responsibility is assumed for inaccuracies.

Furthermore, Motorola Solutions reserves the right to change any products to improve readability, function, or design. Motorola Solutions does not assume any liability arising out of the applications or use of any product or circuit described herein; nor does it cover any license under its patent rights, nor the rights of others.

Supplier's Declaration of Conformity

Per FCC CFR 47 Part 2 Section 2.1077(a)

Responsible Party

Name: Motorola Solutions, Inc.

Address: 2000 Progress Pkwy, Schaumburg, IL. 60196

Phone Number: 1-800-927-2744

Hereby declares that the product:

Model Name: **APX 2000**

conforms to the following regulations:

FCC Part 15, subpart B, section 15.107(a), 15.107(d), and section 15.109(a)

Class B Digital Device

As a personal computer peripheral, this device complies with Part 15 of the FCC Rules. Operation is subject to the following two conditions:

1. This device may not cause harmful interference, and

2. This device must accept any interference received, including interference that may cause undesired operation.

NOTE:
This equipment has been tested and found to comply with the limits for a Class B digital device, pursuant to part 15 of the FCC Rules. These limits are designed to provide reasonable protection against harmful interference in a residential installation. This equipment generates, uses, and can radiate radio frequency energy and, if not installed and used in accordance with the instructions, may cause harmful interference to radio communications. However, there is no guarantee that interference will not occur in a particular installation.

If this equipment does cause harmful interference to radio or television reception, which can be determined by turning the equipment off and on, the user is encouraged to try to correct the interference by one or more of the following measures:

- Reorient or relocate the receiving antenna.
- Increase the separation between the equipment and receiver.
- Connect the equipment into an outlet on a circuit different from that to which the receiver is connected.
- Consult the dealer or an experienced radio or TV technician for help.

Important Safety Information

RF Energy Exposure and Product Safety Guide for Portable Two-Way Radios

CAUTION:
This radio is restricted to Occupational use only.
Before using the radio, read the RF Energy Exposure and Product Safety Guide for Portable Two-Way Radios which contains important operating instructions for safe usage and RF energy awareness and control for Compliance with applicable standards and Regulations.

For a list of Motorola Solutions-approved antennas, batteries, and other accessories, visit the following website:

https://www.motorolasolutions.com

Under Innovation, Science, and Economic Development (ISED) regulations, this radio transmitter may only operate using an antenna of a type and maximum (or lesser) gain approved for the transmitter by ISED. To reduce potential radio interference to other users, the antenna type and its gain should be so chosen that the equivalent isotropically radiated power (e.i.r.p.) is not more than that necessary for successful communication.

This radio transmitter has been approved by Innovation, Science, and Economic Development Canada to operate with a Motorola Solutions-approved antenna with the maximum permissible gain and required antenna impedance for each antenna type indicated. Antenna types not included in this list, having a gain greater than the maximum gain indicated for that type, are strictly prohibited for use with this device.

Notice to Users (FCC and ISED)

This device complies with Part 15 of the FCC rules and Innovation, Science, and Economic Development Canada's (ISED) license-exempt RSS's per the following conditions:

- This device may not cause harmful interference.
- The device must accept any interference received, including interference that may cause undesired operation.

- Changes or modifications made to this device, not expressly approved by Motorola Solutions, could void the authority of the user to operate this equipment.

FCC Licensing Information

This device complies with Parts 90 and 15 of the Federal Communications Commission (FCC) Rules.

Operation is subject to the condition that this device does not cause harmful interference. The radio operates on radio frequencies that are regulated by the Federal Communications Commission (FCC). To transmit on these frequencies, you are required to have a license issued by the FCC. Application is made available on FCC Form 601 and Schedules D, H, and Remittance Form 159.

To obtain these FCC forms, request document 000601 which includes all forms and instructions. If you wish to have the document faxed, mailed, or have questions, use the following contact information.

Fax
Contact the Fax-On-Demand system at 1-202-418-0177

Mail
Call the FCC forms hotline at 1-800-418-FORM or 1-800-418-3676

Contact
For questions regarding FCC license, contact 1-888-CALL-FCC, 1-888-225-5322, or http://www.fcc.gov.

Before filling out your application, you must decide which frequency you can operate on. For questions on determining the radio frequency, call Motorola Solutions Product Services at: 1-800-448- 6686. Changes or modifications not expressly approved by Motorola Solutions may void the user authority granted by the FCC to operate this radio and should not be made. To comply with FCC requirements, transmitter adjustments should be made only by or under the supervision of a person certified as technically qualified to perform transmitter maintenance and repairs in the private land mobile and fixed services as certified by an organization representative of the user of those services.

Replacement of any transmitter component such as crystal, semiconductor, and others not authorized by the FCC equipment authorization for this radio could violate FCC rules.

NOTE: Use of this radio outside the country where it was intended to be distributed is subject to government regulations and may be prohibited.

Applying for Canadian License

The operation of your Motorola Solutions radio is subject to the Radio communications Act and must comply with rules and regulations of the Federal Government's department of Innovation, Science, and Economic Development Canada (ISED). ISED requires that all operators using Private Land Mobile frequencies obtain a radio license before operating their equipment.

Prerequisites: Obtain the latest Canadian License Application form at http://www.ic.gc.ca/ic_wp-pa.htm.

Procedure:

1. Fill in the items as per the instructions. Be sure to print legibly.

   If you need additional space for any item, use the reverse side of the application.
2. Make a copy of your files.
3. Prepare a cheque or money order payable to the "Receiver General for Canada", for an amount for each radio purchased.

   The license is renewed on April 1st each year, and issued for a period of 12 months.
4. Mail your completed application along with your cheque or money order to the closest ISED office.

ISED WLAN Statement

CAUTION:

1. The device for operation in the band 5150–5250 MHz is only for indoor use to reduce the potential for harmful interference to co-channel mobile satellite systems;
2. For devices with detachable antenna(s), the maximum antenna gain permitted for devices in the bands 5250–5350 MHz and 5470–5725 MHz shall be such that the equipment still complies with the e.i.r.p. limit;
3. For devices with detachable antenna(s), the maximum antenna gain permitted for devices in the band 5725–5850 MHz shall be such that the equipment still complies with the e.i.r.p. limits as appropriate; and
4. Where applicable, antenna type(s), antenna model(s), and worst-case tilt angle(s) necessary to remain compliant with the e.i.r.p. elevation mask requirement set forth in section 6.2.2.3 shall be clearly indicated.

Maritime Radio Use in the VHF Frequency Range

Special Channel Assignments

Emergency Channel

If you are in imminent and grave danger at sea and require emergency assistance, use VHF Channel 16 to send a distress call to nearby vessels and the United States Coast Guard. Transmit the following information, in this order:

1. "MAYDAY, MAYDAY, MAYDAY."
2. "THIS IS _____, CALL SIGN _____." State the name of the vessel in distress 3 times, followed by the call sign or other identification of the vessel, stated 3 times.
3. Repeat "MAYDAY" and the name of the vessel.
4. "WE ARE LOCATED AT _____." State the position of the vessel in distress, using any information that will help responders to locate you, e.g.:
   - latitude and longitude
   - bearing (state whether you are using true or magnetic north)
   - distance to a well-known landmark
   - vessel course, speed, or destination
5. State the nature of the distress.
6. Specify what kind of assistance that you need.
7. State the number of persons on board and the number needing medical attention, if any.
8. Mention any other information that would be helpful to responders, such as type of vessel, vessel length and/or tonnage, hull color, etc.
9. "OVER."
10. Wait for a response.
11. If you do not receive an immediate response, remain by the radio, and repeat the transmission at intervals until you receive a response. Be prepared to follow any instructions given to you.

Non-Commercial Call Channel

For non-commercial transmissions, such as fishing reports, rendezvous arrangements, repair scheduling, or berthing information, use **VHF Channel 9**.

Operating Frequency Requirements

A radio designated for shipboard use must comply with Federal Communications Commission Rule Part 80 as follows:

- on ships subject to Part II of Title III of the Communications Act, the radio must be capable of operating on the 156.800 MHz frequency.
- on ships subject to the Safety Convention, the radio must be capable of operating:

- in the simplex mode on the ship station transmitting frequencies specified in the 156.025–157.425 MHz frequency band, and
- in the semiduplex mode on the two frequency channels specified in the table below.

NOTE:
Simplex channels 3, 21, 23, 61, 64, 81, 82, and 83 cannot be lawfully used by the general public in US waters.

Additional information about operating requirements in the Maritime Services can be obtained from the full text of FCC Rule Part 80 and from the US Coast Guard.

Table 9: VHF Marine Channel List

Channel Number	Frequency (MHz)	
	Transmit	Receive
1	156.050	160.650
2	156.100	160.700
*	156.150	160.750
4	156.200	160.800
5	156.250	160.850
6	156.300	–
7	156.350	160.950
8	156.400	–
9	156.450	156.450
10	156.500	156.500
11	156.550	156.550
12	156.600	156.600
13**	156.650	156.650
14	156.700	156.700
15**	156.750	156.750
16	156.800	156.800
17**	156.850	156.850
18	156.900	161.500
19	156.950	161.550
20	157.000	161.600
*	157.050	161.650
22	157.100	161.700
*	157.150	161.750
24	157.200	161.800
25	157.250	161.850
26	157.300	161.900
27	157.350	161.950

28	157.400	162.000
60	156.025	160.625
*	156.075	160.675
62	156.125	160.725
63	156.175	160.775
*	156.225	160.825
65	156.275	160.875
66	156.325	160.925
67**	156.375	156.375
68	156.425	156.425
69	156.475	156.475
71	156.575	156.575
72	156.625	–
73	156.675	156.675
74	156.725	156.725
75	***	***
76	***	***
77**	156.875	–
78	156.925	161.525
79	156.975	161.575
80	157.025	161.625
*	157.075	161.675
*	157.125	161.725
*	157.175	161.775
84	157.225	161.825
85	157.275	161.875
86	157.325	161.925
87	157.375	161.975
88	157.425	162.025

NOTE:
** Simplex channels 3, 21, 23, 61, 64, 81, 82, and 83 cannot be **lawfully used** by the general public in US waters.*

*** Low power (1 W) only.*

**** Guard band.*

NOTE: A – in the Receive column indicates that the channel is transmitted only.

Declaration of Compliance for the Use of Distress and Safety Frequencies

The radio equipment does not employ a modulation other than the internationally adopted modulation for maritime use when it operates on the distress and safety frequencies specified in RSS-182 Section 5.4.

Technical Parameters for Interfacing External Data Sources

	RS232	USB	SB9600
Input Voltage (Volts Peak-to-peak)	18 V	3.6 V	5 V
Max Data Rate	115 Kbps	12 Mbps	9.6 Kbps
Impedance	5000 Ω	90 Ω	120 Ω

Limited Warranty

MOTOROLA SOLUTIONS COMMUNICATION PRODUCTS

I. WHAT THIS WARRANTY COVERS AND FOR HOW LONG:

MOTOROLA SOLUTIONS, INC. (“MOTOROLA”) warrants the MOTOROLA SOLUTIONS manufactured Communication Products listed below (“Product”) against defects in material and workmanship under normal use and service for a period of time from the date of purchase as scheduled below:

ASTRO APX 2000 Portable Units	One (1) Year
Product Accessories	One (1) Year

For LACR region:

ASTRO APX 2000 Portable Units	Three (3) Years
Product Accessories	One (1) Year

MOTOROLA SOLUTIONS, at its option, will at no charge either repair the Product (with new or reconditioned parts), replace it (with a new or reconditioned Product), or refund the purchase price of the Product during the warranty period provided it is returned in accordance with the terms of this warranty. Replaced parts or boards are warranted for the balance of the original applicable warranty period. All replaced parts of Product shall become the property of MOTOROLA SOLUTIONS.

This express limited warranty is extended by MOTOROLA SOLUTIONS to the original end user purchaser only and is not assignable or transferable to any other party. This is the complete warranty for the Product manufactured by MOTOROLA SOLUTIONS. MOTOROLA SOLUTIONS assumes no obligations or liability for additions or modifications to this warranty unless made in writing and signed by an officer of MOTOROLA SOLUTIONS.

Unless made in a separate agreement between MOTOROLA SOLUTIONS and the original end user purchaser, MOTOROLA SOLUTIONS does not warrant the installation, maintenance or service of the Product.

MOTOROLA SOLUTIONS cannot be responsible in any way for any ancillary equipment not furnished by MOTOROLA SOLUTIONS which is attached to or used in connection with the Product, or for operation of the Product with any ancillary equipment, and all such equipment is expressly excluded from this warranty. Because each system which may use the Product is unique, MOTOROLA SOLUTIONS disclaims liability for range, coverage, or operation of the system as a whole under this warranty.

MOTOROLA SOLUTIONS offers the following optional extended service contracts.

DEVICE MANAGED SERVICES (DMS) ACCIDENTAL DAMAGE

Provides for extended hardware repair coverage INCLUDING CHEMICAL, LIQUID, FIRE, AND OTHER PHYSICAL DAMAGE. Accidental damage coverage is available in conjunction with MOTOROLA SOLUTIONS’S standard Commercial Warranty and starts from the FIRST DAY the radio is put into use. Service performed under this plan consists of repair or replacement of the covered equipment as set forth in the terms and conditions. Repairs will be made only at the designated MOTOROLA SOLUTIONS repair depot. Local services are not included. MOTOROLA SOLUTIONS will pay the inbound shipping charges only with use of the

MOTOROLA SOLUTIONS designated delivery service. MOTOROLA SOLUTIONS will pay for outbound shipping via MOTOROLA SOLUTIONS'S normal shipping methods.

DEVICE MANAGED SERVICES (DMS) STANDARD HARDWARE

Provides extended hardware normal wear and tear repair coverage beginning AFTER MOTOROLA SOLUTIONS'S standard Commercial Warranty period expires. Service performed under this plan consists of repair of the covered equipment as set forth in the terms and conditions. Repairs will be made only at the designated MOTOROLA SOLUTIONS repair depot. Local services are not included. MOTOROLA SOLUTIONS will pay for outbound shipping via MOTOROLA SOLUTIONS'S normal shipping methods.

II. GENERAL PROVISIONS:

This warranty sets forth the full extent of MOTOROLA SOLUTIONS' responsibilities regarding the Product. Repair, replacement, or refund of the purchase price, at MOTOROLA SOLUTIONS's option, is the exclusive remedy. THIS WARRANTY IS GIVEN IN LIEU OF ALL OTHER EXPRESS WARRANTIES. IMPLIED WARRANTIES, INCLUDING WITHOUT LIMITATION, IMPLIED WARRANTIES OF MERCHANTABILITY AND FITNESS FOR A PARTICULAR PURPOSE, ARE LIMITED TO THE DURATION OF THIS LIMITED WARRANTY. IN NO EVENT SHALL MOTOROLA SOLUTIONS BE LIABLE FOR DAMAGES IN EXCESS OF THE PURCHASE PRICE OF THE PRODUCT, FOR ANY LOSS OF USE, LOSS OF TIME, INCONVENIENCE, COMMERCIAL LOSS, LOST PROFITS OR SAVINGS OR OTHER INCIDENTAL, SPECIAL OR CONSEQUENTIAL DAMAGES ARISING OUT OF THE USE OR INABILITY TO USE SUCH PRODUCT, TO THE FULL EXTENT SUCH MAY BE DISCLAIMED BY LAW.

III. STATE LAW RIGHTS:

SOME STATES DO NOT ALLOW THE EXCLUSION OR LIMITATION OF INCIDENTAL OR CONSEQUENTIAL DAMAGES OR LIMITATION ON DURATION OF IMPLIED WARRANTY, THEREFORE THE ABOVE LIMITATION OR EXCLUSIONS MAY NOT APPLY.

This warranty gives specific legal rights, and there may be other rights, which may vary from state to state.

IV. HOW TO GET WARRANTY SERVICE:

You must provide proof of purchase (bearing the date of purchase and Product item serial number) in order to receive warranty service and, also, deliver or send the Product item, transportation and insurance prepaid, to an authorized warranty service location. Warranty service will be provided by MOTOROLA SOLUTIONS through one of its authorized warranty service locations. If you first contact the company which sold you the Product (e.g., dealer or communication service provider), it can facilitate your obtaining warranty service. You can also call MOTOROLA SOLUTIONS at 1-800-927-2744 US/Canada.

V. WHAT THIS WARRANTY DOES NOT COVER:

1. Defects or damage resulting from use of the Product in other than its normal and customary manner.
2. Defects or damage from misuse, accident, water, or neglect.
3. Defects or damage from improper testing, operation, maintenance, installation, alteration, modification, or adjustment.
4. Breakage or damage to antennas unless caused directly by defects in material workmanship.
5. A Product subjected to unauthorized Product modifications, disassembles, or repairs (including, without limitation, the addition to the Product of non-MOTOROLA SOLUTIONS supplied equipment) which adversely affect performance of the Product or interfere with MOTOROLA SOLUTIONS' normal warranty inspection and testing of the Product to verify any warranty claim.
6. Product which has had the serial number removed or made illegible.

7. Rechargeable batteries if:
   - any of the seals on the battery enclosure of cells are broken or show evidence of tampering.
   - the damage or defect is caused by charging or using the battery in equipment or service other than the Product for which it is specified.
8. Freight costs to the repair depot.
9. A Product which, due to illegal or unauthorized alteration of the software/firmware in the Product, does not function in accordance with MOTOROLA SOLUTIONS's published specifications or the FCC certification labeling in effect for the Product at the time the Product was initially distributed from MOTOROLA SOLUTIONS.
10. Scratches or other cosmetic damage to Product surfaces that does not affect the operation of the Product.
11. Normal and customary wear and tear.

VI. PATENT AND SOFTWARE PROVISIONS:

MOTOROLA SOLUTIONS will defend, at its own expense, any suit brought against the end user purchaser to the extent that it is based on a claim that the Product or parts infringe a United States patent, and MOTOROLA SOLUTIONS will pay those costs and damages finally awarded against the end user purchaser in any such suit, which are attributable to any such claim, but such defense and payments are conditioned on the following:

1. that MOTOROLA SOLUTIONS will be notified promptly in writing by such purchaser of any notice of such claim,
2. that MOTOROLA SOLUTIONS will have sole control of the defense of such suit and all negotiations for its settlement or compromise, and
3. should the Product or parts become, or in MOTOROLA SOLUTIONS' opinion be likely to become, the subject of a claim of infringement of a United States patent, that such purchaser will permit MOTOROLA SOLUTIONS, at its option and expense, either to procure for such purchaser the right to continue using the Product or parts or to replace or modify the same so that it becomes non-infringing or to grant such purchaser a credit for the Product or parts as depreciated and accept its return. The depreciation will be an equal amount per year over the lifetime of the Product or parts as established by MOTOROLA SOLUTIONS.

MOTOROLA SOLUTIONS will have no liability with respect to any claim of patent infringement, which is based upon the combination of the Product or parts furnished hereunder with software, apparatus or devices not furnished by MOTOROLA SOLUTIONS, nor will MOTOROLA SOLUTIONS have any liability for the use of ancillary equipment or software not furnished by MOTOROLA SOLUTIONS, which is attached to or used in connection with the Product. The foregoing states the entire liability of MOTOROLA SOLUTIONS with respect to infringement of patents by the Product or any parts thereof.

Laws in the United States and other countries preserve for MOTOROLA SOLUTIONS certain exclusive rights for copyrighted MOTOROLA SOLUTIONS software such as the exclusive rights to reproduce in copies and distribute copies of such MOTOROLA SOLUTIONS software. MOTOROLA SOLUTIONS software may be used in only the Product in which the software was originally embodied and such software in such Product may not be replaced, copied, distributed, modified in any way, or used to produce any derivative thereof. No other use including, without limitation, alteration, modification, reproduction, distribution, or reverse engineering of such MOTOROLA SOLUTIONS software or exercise of rights in such MOTOROLA SOLUTIONS software is permitted. No license is granted by implication, estoppel or otherwise under MOTOROLA SOLUTIONS patent rights or copyrights.

VII. GOVERNING LAW:

This Warranty is governed by the laws of the State of Illinois, U.S.A.

VIII. For Australia Only

This provision applies to products and services supplied by Motorola Solutions to consumers within the meaning of the Australian Consumer Law. This warranty is given by Motorola Solutions Australia Pty Limited (ABN16 004 742 312) of Tally Ho Business Park, 10 Wesley Court. Burwood East, Victoria. Our goods come with guarantees that cannot be excluded under the Australia Consumer Law. For major failures with the service, you are entitled:

- To cancel your service contract with us: and
- To a refund for the unused portion, or to compensation for its reduced value.

You are entitled to choose a replacement or refund for a major failure with goods. If a failure with the goods or service does not amount to a major failure, you are entitled to have the failure rectified in a reasonable time. If this is not done, you are entitled to a refund for the goods, and to cancel the contract for the service and obtain a refund of any unused portion. You are also entitled to be compensated for any other reasonably foreseeable loss or damage from a failure in the goods or service. If you have any queries, please call Motorola Solutions Australia at 1800 457 439. You may also visit our website: https://www.motorolasolutions.com/en_xa/support.html for current warranty terms.